Markel® Products Company

THE CHOICE OF PROFESSIONALS SINCE 1921

www.markel-products.com

2021 MECHANICAL PRODUCTS CATALOG

ELECTRIC HEAT, CONTROLS, & THERMOSTATS

INDUSTRIAL - COMMERCIAL - RESIDENTIAL

© Copyright 2021; TPI Corporation, P.O. Box 4973, Johnson City, TN 37602

December 11, 2020: Distribution Products Catalog - REV: 12112020 - PRINT DATE: 12/11/2020

www.facebook.com/tpicorporation @tpicorporation

Tel: 1-800-682-3398 | 1-423-477-4131 | Fax: 1-423-477-0064 | www.tpicorp.com

HEATERS

CONTROLS

CATEGORY		PAGE
AMPERAGE CHART & WARRANTY		**2**
ELECTRIC HEAT COMFORT ZONES		**3**
HAZARDOUS LOCATION & WASHDOWN		
HLA*	Hazardous Location Fan Forced	4-7
PHLA*	Portable Hazardous Location Fan Forced	7
FEP*	Hazardous Location Convector	8-9
5500*	Washdown Fan Forced	10-11
UNIT HEATERS		
UH	Horizontal Fan Forced	12-13
5100	Horizontal or Vertical Fan Forced	14-19
2600	Downflow Fan Forced	20-21
5700	Confined Space Plenum Rated	22
5600	Multiple Wattage Fan Forced	23
6300	Cabinet Fan Forced	24-27
WALL CONVECTORS		
8500*	Commercial Slope Top	28-29
8800*	Institutional	30-31
4100*	Recessed Commercial	32-33
CEILING & COVE		
3000	Fan Forced	34
3380	Commercial Fan Forced	34
3480*	Commercial Recessed Fan Forced	35
3470*	Commercial Surface Fan Forced	36
CP/RCP	Radiant Ceiling Panel	37
CVX	Radiant Cove	38
WALL HEATERS		
305	Commercial Midsized Fan Forced	39
4400	Commercial Low Profile Fan Forced	39
3340	Heavy Duty	40-41
3320	Commercial Fan Forced	42-43
3420/50	Heavy Duty Fan Forced; Setback	44-46
3310	Residential/Commercial Fan Forced	47-48
3200	Midsized Fan Forced	49
4300	Low Profile Fan Forced	50
4800	Register Style Fan Forced	51
ARCHITECTURAL SILL LINE		
	General Product Information	52
9100*	Radius Front Draft Barrier	53-54
9300*	Radius Front Draft Barrier	55-56
DBF/DBT*	3 ⅛" x 4 ½" Convector	57
RDBT*	7" x 6" Convector (Round)	57
ASHDB*	5 ½" x 8" thru 20" Tall Convector	58
9900*	Commercial/Industrial Floor Heater	59-63
BASEBOARD HEATERS		
3900	Hydronic Electric	64
3700	Architectural Style Electric	65
	Hydronic/Architectural Accessories	66
2900S	Stainless Steel Element Electric	67
2900C	Heavy Duty Commercial Electric	68
	Electric Baseboard Accessories	69
ELECTRIC INFRARED HEATERS		
	Electric Infrared Product Information	70-71
FSS	Heavy Duty Flat Panel Emitter	72-73
FSA	Architectural Flat Panel Emitter	74-75
TH & THSS	Mul-T-Mount	76-81
THA	Mul-T-Mount	82-83
OCH	Outdoor/Indoor Rated Quartz	84-86
RPH	Outdoor Rated Stainless Steel	87
MM	Mitey Midget	87
FFH	Utility	87

Note: The information contained herein is deemed to be as accurate as possible upon the time of printing. However, to insure that you receive the most reliable information contact the factory should a question arise.

Prices are subject to change without notice.

All prices are given in U.S. Dollar Amounts.

PH: 1-800-682-3398. © Copyright 2021; TPI Corporation.

CATEGORY		PAGE
ELECTRIC INFRARED HEATERS, CONTINUED		
	Elements, Accessories, & Controls	88-90*
ICP*	Infrared Control Panels	91-92
FSP	Heavy Duty Flat Panel Emitter	93
PCH	Portable Quartz Infrared Spot Heater	94
RHG	Portable Infrared Instant "On-Off" Heat Gun	94
HP	Portable Electric Infrared Heat Panels	94
PORTABLE HEATERS		
FES & YES	Salamander Heat Wave™	95-96
150-TS	120V Electric Portable Heater	97
198	120V Fan Glo	97
178	120V Ceramic	97
188	120V Milk House	98
E3915	120V Hydronic Baseboard	98
483	120V Baseboard	98
474	240V Dual Heat Fan Forced	99
5800	240V Garage/Workshop	99
ICH	240V Construction/Utility	99
680	240V Heavy Duty	100
SPECIALTY HEATERS		
RPH	Pump House	100
FH	In-Floor Fan Forced	101
TSH	Kick-Space Fan Forced	101
AIR CURTAIN		
CF-C	2 Speed Commercial Air Curtain	101
CF/CFH*	Variable Speed Air Curtain	102
THERMOSTATS		
ET9	Line Voltage, 22A, 277VAC	103
EPET / HLT	Line Voltage, Haz. Loc., 120-277VAC	103
2000	Line Voltage, 22A, 120-277VAC	103
TW	Line Voltage, 120-277VAC	104
CKT / KT	Line Voltage, 120-250VAC	104
T	Line Voltage, Precision, 120-277VAC	105
TL	Line Voltage, Programmable	105
UT	Low Voltage, Vertical/Horizontal Mnt.	105
RK	Low Voltage, Square	105
SD	Clever Comfort Setback on Demand	106
24A	Low Voltage Relays	107
H	Humidistat/DeHumidistat, 24-240VAC	107
LB	Bi-Metal In-Built	107
LR	Bi-Metal Outdoor	107
RH	Air Flow / Differential Pressure Switches	108
	Differential Pilot Tubes	108
TG	Thermostat Guards	108
THERMAL AREA TREATMENT		
TAT	Thermal Area Treatment/Accessories	109
HR	Hot Room Heaters	109
DUCT HEATERS		
HP*	HotPod Resi. Supplemental Duct Heat	110-111
5700	Confined Space Plenum Rated	112
7200/7300*	Plenum Heaters	112-115
PD*	Packaged (preconfigured) Duct Heat	116
CHMS*	Enclosed Finned Tubular Element	117
HF*	Open Coil Element	118-119
MFH*	Fan Coil Units	120-123
PRODUCT INDEX		

*Products listed in this section are custom built and subject to 100% cancellation/restocking charges

Amperage Chart & Electric Heat Products Limited Warranty

K.W Rating	B.T.U.H.	208 Volt AMP Rating		220 Volt AMP Rating		230 Volt AMP Rating		240 Volt AMP Rating		277 Volt AMP Rating	440 Volt AMP Rating	480 Volt AMP Rating	550 Volt AMP Rating
		1 PH	3 PH	1 PH	3 PH	1 PH	3 PH	1 PH	3 PH	1 PH	3 PH	3 PH	3 PH
00.5	1,706	2.4	1.4	2.3	1.3	2.2	1.3	2.1	1.2	1.8	0.6	0.6	0.5
01.0	3,413	4.8	2.8	4.5	2.6	4.3	2.5	4.2	2.4	3.6	1.3	1.2	1.0
02.0	6,826	9.6	5.5	9.1	5.2	8.7	5.0	8.3	4.8	7.2	2.6	2.4	2.1
03.0	10,239	14.4	8.3	13.6	7.9	13.0	7.5	12.5	7.2	10.8	3.9	3.6	3.1
04.0	13,652	19.2	11.1	18.2	10.4	17.5	10.1	16.6	9.6	14.4	5.2	4.8	4.2
05.0	17,065	24.0	13.8	22.7	13.1	21.7	12.6	20.8	12.0	18.1	6.6	6.0	5.2
06.0	20,478	28.8	16.6	27.3	15.7	26.1	15.1	25.0	14.4	21.7	7.9	7.2	6.3
07.0	23,891	33.6	19.4	31.8	18.4	30.4	17.6	29.1	16.8	25.3	9.2	8.4	7.3
08.0	27,304	38.5	22.2	36.4	20.9	34.9	20.1	33.3	19.2	28.9	10.5	9.6	8.4
09.0	30,717	42.8	24.9	40.9	23.3	39.1	22.6	37.7	21.4	32.5	11.8	10.8	9.5
10.0	34,130	48.1	27.4	45.4	26.2	43.5	25.1	41.7	24.0	36.1	13.2	12.0	10.5
11.0	37,543	52.9	30.5	50.0	28.6	47.8	27.6	45.8	26.4	39.7	14.5	13.2	11.6
12.0	40,956	57.7	33.2	54.5	31.5	52.1	30.2	50.0	28.6	43.3	15.8	14.4	12.6
13.0	44,369	62.5	36.0	59.1	34.1	56.9	32.7	54.2	31.3	46.9	17.1	15.6	13.7
14.0	47,782	67.3	38.8	63.6	36.7	60.9	35.2	58.3	33.7	50.5	18.4	16.8	14.7
15.0	51,195	72.1	41.5	68.2	39.1	65.2	37.7	62.5	35.1	54.2	19.8	18.0	15.8
16.0	54,608	76.9	44.3	72.7	41.9	69.6	40.2	66.7	38.5	57.8	21.1	19.2	16.9
17.0	58,021	81.7	47.1	77.3	44.3	73.9	42.7	70.8	40.9	61.4	22.4	20.4	17.9
18.0	61,434	86.5	49.8	81.8	47.2	78.3	45.2	75.0	43.3	65.0	23.7	21.6	19.0
19.0	64,847	91.3	52.6	86.4	49.6	82.6	47.7	79.2	45.7	68.6	25.1	22.8	20.0
20.0	68,260	96.1	55.1	90.9	52.5	86.9	50.3	83.3	48.1	72.2	26.4	24.0	21.1
21.0	71,673	100.0	58.2	95.6	55.1	91.3	52.9	87.5	50.5	75.8	27.7	25.2	22.1
22.0	75,086	105.8	60.9	100.0	57.7	95.7	55.3	91.7	52.9	79.4	29.0	26.4	23.1
23.0	78,499	110.6	63.7	14.5	60.4	100.0	57.9	95.8	55.3	83.0	30.3	27.6	24.3
24.0	81,912	115.4	66.5	109.1	62.9	104.3	60.3	100.0	57.7	86.6	31.7	28.8	25.3
25.0	85,325	120.2	69.2	113.6	65.3	108.6	62.8	104.1	60.1	90.3	33.0	30.1	26.4
26.0	88,738	125.0	72.0	118.2	68.3	113.0	65.3	108.3	62.5	93.9	34.3	31.3	27.4
27.0	92,151	129.8	74.8	122.7	70.9	117.4	67.8	112.5	64.7	97.5	35.6	32.5	28.5
28.0	95,564	134.6	77.2	128.2	73.5	121.7	70.3	116.6	67.3	101.1	36.9	33.7	29.5
29.0	98,977	139.4	80.3	131.8	76.0	126.0	72.9	120.8	69.7	104.7	38.3	34.9	30.6
30.0	102,390	144.2	83.1	136.4	78.7	130.4	75.4	125.0	72.1	108.3	39.6	36.1	31.7
31.0	105,803	149.0	85.9	140.9	81.3	134.7	77.9	129.2	74.5	111.9	40.9	37.3	32.7
32.0	109,216	153.8	88.7	145.4	83.9	139.0	80.4	133.4	76.9	115.5	42.2	38.5	33.8
33.0	112,629	158.6	91.5	149.9	86.5	143.3	82.9	137.6	79.3	119.1	43.5	39.7	34.8
34.0	116,042	163.4	94.3	154.4	89.1	147.6	85.4	141.8	81.7	112.7	44.8	40.9	35.9
35.0	119,455	168.2	97.1	158.9	91.7	151.9	87.9	146.0	84.1	126.4	46.1	42.1	36.9
36.0	122,868	173.0	99.9	163.4	94.3	156.2	90.4	150.2	86.5	130.0	47.4	43.3	38.0
37.0	126,281	177.8	102.7	167.9	96.9	160.5	92.9	154.4	88.9	133.6	48.7	44.5	39.0
38.0	129,694	182.6	105.5	172.4	99.5	164.8	95.4	158.6	91.3	137.2	50.0	45.7	40.1
39.0	133,107	187.4	108.3	176.9	102.1	169.1	97.9	162.8	93.7	140.7	51.3	46.9	41.1
40.0	136,520	192.2	111.1	181.4	104.7	173.4	100.4	167.0	96.1	144.4	52.6	48.1	42.2
41.0	139,933	197.0	113.9	185.9	107.3	177.7	102.9	171.2	98.5	148.0	53.9	49.3	43.2
42.0	143,346	201.8	116.7	190.4	109.9	182.0	105.4	175.4	100.9	151.6	55.2	50.6	44.3
43.0	146,759	206.6	119.5	194.9	112.5	186.3	107.9	179.6	103.3	155.2	56.5	51.8	45.3
44.0	150,172	211.4	122.3	199.4	115.1	190.6	110.4	183.8	105.7	158.8	57.8	53.0	46.4
45.0	153,585	216.2	125.1	203.9	117.7	194.9	112.9	188.0	108.1	162.5	59.1	54.2	47.4
46.0	156,998	221.0	127.9	208.4	120.3	199.2	115.4	192.2	110.5	166.1	60.4	55.4	48.5
47.0	160,411	225.8	130.7	212.9	122.9	203.5	117.9	196.4	112.9	169.7	61.7	56.6	49.5
48.0	163,824	230.6	133.5	217.4	125.5	207.8	120.4	200.6	115.3	173.3	63.0	57.8	50.6
49.0	167,237	235.4	136.3	221.9	128.1	212.1	122.9	204.8	117.7	176.9	64.3	59.0	51.6
50.0	170,650	240.2	139.1	226.4	130.7	216.4	125.4	209.0	120.1	180.5	65.6	60.2	52.7
51.0	174,063	245.0	141.9	230.9	133.3	220.7	127.9	213.2	122.5	184.1	66.9	61.4	53.7
52.0	177,476	249.8	144.7	235.4	135.9	225.0	130.4	217.4	124.9	187.7	68.2	62.6	54.8
53.0	180,889	254.6	147.5	239.9	138.5	229.3	132.9	221.6	127.3	191.3	69.5	63.8	55.8
54.0	184,302	259.4	150.3	244.4	141.1	233.6	135.4	225.8	129.7	194.9	70.8	65.0	56.9
55.0	187,715	264.2	153.1	248.9	143.7	237.9	137.9	230.0	132.1	198.6	72.2	66.2	57.9
56.0	191,128	269.0	155.9	253.4	146.3	242.2	140.4	234.2	134.5	202.2	73.5	67.4	58.8
57.0	194,541	273.8	158.7	257.9	148.9	246.5	142.9	238.4	136.9	205.8	74.9	68.6	59.9
58.0	197,954	278.6	161.5	262.4	151.5	250.8	145.4	242.6	139.3	209.4	76.2	69.8	60.9
59.0	201,367	283.4	164.3	266.9	154.1	255.1	147.9	246.8	141.7	213.0	77.5	71.0	62.3
60.0	204,780	288.2	167.1	271.4	156.7	259.4	150.4	251.0	144.1	216.6	78.8	72.2	63.0

Note: All custom built products are subject to 100% cancellation/restock charges.

In addition to the Limited Warranty stated to the right covering general products, TPI Corporation extends this warranty on the following listed products, which are warranted to the original consumer from the original date of purchase for the total time periods indicated herein below:

Heat Products	
Elements in 2900 Series Baseboard	10 Years
All Other Heating Products	1 Year
Thermostats & Controls	2 Years

TPI Corporation provides a limited warranty of materials and workmanship for a period of (i) ten (10) years for elements in 2900 Series baseboard heaters, (ii) two (2) years for Thermostats and Controls, (iii) five (5) years on HD and HDH series fans, (iv) three (3) years on UHP and IHP series fans, (v) and twelve (12) months for all other products, with the warranty period commencing on the original date of purchase. The TPI warranty is limited to materials manufactured and work performed by TPI Corporation, and does not include damage or failure caused by acts of God, abuse, misuse, connected to or placed on other than rated voltage, abnormal usage, faulty installation, failure to follow suggested maintenance procedures enclosed with the product, improper maintenance or any repairs other than those provided by an authorized TPI Corporation service center. For the name of your nearest authorized TPI Corporation service center, please write to TPI Corporation, P.O. Box 4973, Johnson City, Tennessee, 37602 or call 1-800-682-3398.

During the warranty period, TPI Corporation will, at its sole option, repair or replace any defective parts or products returned, freight prepaid, to the TPI Corporation factory or such other location as TPI Corporation may designate. No parts or products will be accepted for repair or replacement without prior authorization from TPI Corporation and a return merchandise authority (RMA) number issued by TPI Corporation. Returned products must be packaged carefully and TPI Corporation shall not be responsible for damage in transit. When returning parts, the owner must provide the model number of the product and nature of difficulty being experienced.

This warranty does not obligate TPI Corporation to bear the cost of labor in replacing any assembly, unit or component part thereof, nor does TPI Corporation assume any liability for secondary charges, expenses for installing or removal, freight or damages. There will be charges rendered for product repairs made after the warranty period has expired. Proof of purchase, including date, must accompany request for in-warranty service. This warranty gives you specific legal rights and you may have other rights, which may vary, from state to state.

Except for the limited warranty provided in the foregoing paragraph, all parts and products sold by TPI Corporation are sold 'as is', 'where is', and without any other warranty of any kind or nature, whether express, implied, or statutory and including, without limitation, any implied warranty of specific performance or merchantability.

Under no circumstances, even with respect to claims covered by the foregoing warranty, will TPI Corporation be responsible for any incidental, consequential, special, or punitive damages of any kind or nature arising from or related to the parts or products sold by TPI Corporation.

In any event, TPI Corporation's maximum liability shall not in any case exceed the purchase price for the part or product claimed to be defective.

You hereby expressly agree to waive any and all rights to a trial by jury with respect to any product manufactured or supplied by TPI Corporation.

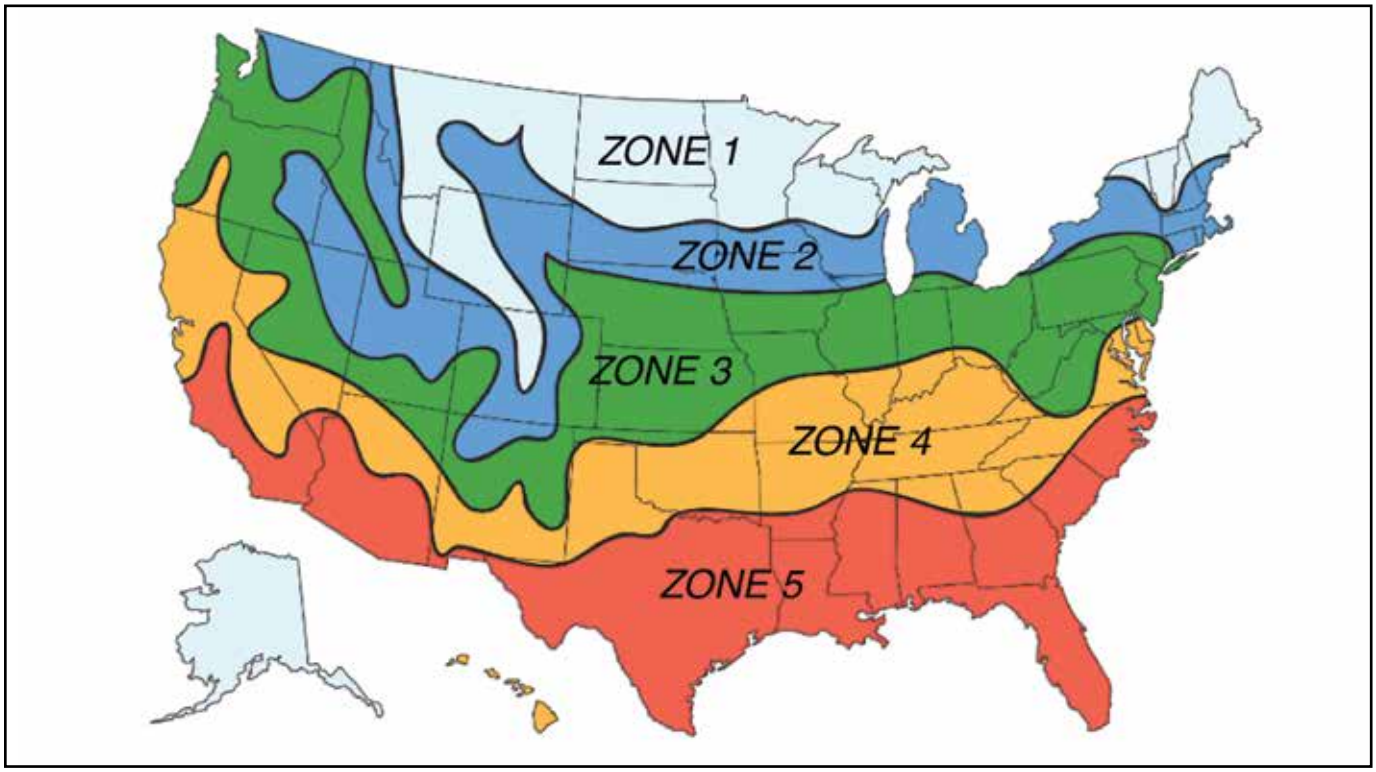

INSULATION			
R-VALUE	Recommended	FHA Standard	Minimum: Not Recommended
Ceiling	*R-24	*R-19	*R-11
Walls	R-13	11	R-7
Floor	R-24	11	----
ZONE	APPROXIMATE WATTAGE NEED PER SQUARE FOOT		
1	8.6	10.0	14.6
2	7.7	9.0	13.1
3	7.1	8.2	12.0
4	6.4	7.4	10.8
5	6.0	7.0	10.2

*"R"values are industry standards for insulation effectiveness. Ask company representative for assistance if you do not know "R" for your present structure insulation.

Baseboard or wall mount style? Recessed or surface type? It's easy to select the heater that's right for you.

1. Measure the size of the room(s) or area you intend to heat for square footage.
   You will need the length times the width to get this calculation.
2. Find your location on the map above. This determines your basic heating zone.
3. The chart shown below the map lists insulation values based on the effectiveness of the insulation presently in your home.
   Find your heating zone on the chart and the approximate wattage per square foot you will need.
4. Multiply the total number of square feet you intend to heat by the approximate wattage per square foot you just obtained.
   This will determine your total heating requirement in watts for the room.

How Much Heat is Right For You?

Figures are based on 15% total window and door openings in outside walls, and 3/4 total home air changes per hour.
Typical frame-type construction with unheated basement or unventilated crawl space.
If you do not have storm doors and windows, add 30% to the watts per square foot (multiply by 1.3).

That's all there is to it! Now choose the heater with a wattage equal to what you need. Your final selection will, of course, depend on available wall space, window placement, ect.

Sample Calculation:

Example = 10' x 12' room in Zone 3 with FHA standard insulation

1. Determine room square footage: 10' x 12' = 120 sq. ft.
2. Zone 3 with FHA standard insulation requires 8.2 watts per sq. ft.
3. Multiply square footage of room to be heated by the approximate wattage per square foot required.
   120 sq. ft x 8.2 watts = 984 watts required.
   From this calculation it can be reasoned that a 1000 watt heater would be required.

FAN-FORCED SUSPENDED UNIT HEATERS 3-25 KW FOR T-3B CLASS I, GROUP C & D, DIVISION 1 & 2 AND CLASS II, GROUPS E, F & G, DIVISIONS 1 & 2.

Shown with optional pilot light and disconnect switch

WARNING: This product can expose you to chemicals including nickel which is known to the State of California to cause cancer, and chromium, which is known to the State of California to cause birth defects and/or reproductive harm. For more information go to www.P65Warnings.ca.gov.

- Designed for rugged industrial applications in hazardous locations where the possibility of explosion or fire exists due to the presence of certain flammable gases, vapors, powdered metals or dust
- Permanently sealed, liquid to air, finned tube heat exchanger core
- Ethylene Glycol to water mixture used as a heat transfer fluid in the heater core, providing -45° C. (-49° F) freeze damage protection
- High-performance electric motor driven fan blows air across finned tubes to effect uniform heat transfer and area heat distribution
- Manual Reset capillary type limit provides high temperature regulation and is rated for 6,000 cycles of service
- Stainless steel and aluminum pressure relief valve for overpressure
- A back-up contactor is included for additional protection
- 14 gauge steel cabinet powder coated epoxy paint finish contains heater core, motor, and fan assembly
- Narrow gap safety fan guard shields all moving parts
- Adjustable louvers allow directional control of air
- Copper conductor wires enclosed in rigid metal conduits carry all electrical power
- Box lugs furnished for field connections within approved enclosure
- Made in U.S.A.

Product Specifications

Heat Exchanger and Elements:
Heavy walled, painted carbon steel with aluminum fins liquid heat exchanger, liquid filled with three-immersion type copper sheathed elements. The elements shall have the highest quality nickel-chromium resistance wire encased in a magnesium oxide dielectric and be hermetically sealed into the heat exchanger core. The heat transfer fluid is Ethylene-glycol solution for operation to -49 degrees F (– 45 degrees C). Stainless steel and aluminum pressure relief valve for overpressure.

Thermal Cutout High Limit Protection and Optional Pilot Light:
The capillary type manual reset thermal cutout shall be rated for 6000 cycles of service and mounted in the liquid filled heat exchanger. An optional pilot light to indicate power on is located on control enclosure.

Motor:
The motor shall be a permanent split capacitor type, permanently lubricated, ball bearing type. The motor shall be rated for hazardous location and operate at rated voltage of heater, 60 Hz, 1725 RPM.

Control Enclosure:
All controls shall be factory installed and wired in a hazardous location enclosure. Contactors and back-up contactors are heavy duty type and break all ungrounded conductors and be rated for 100,000 cycles at full load. Standard 24-Volt control circuit shall be supplied by internal class II transformer. An optional factory wired integral thermostat or standard terminal block for field wiring to optional remote wall thermostat are wired in control panel. No fan delay relay.

Disconnect Switch:
Factory mounted and wired hazardous location disconnect switch is available as optional accessory.

Cabinet With Adjustable Louvers:
The Cabinet shall be 14 gauge, cold rolled steel with powder coated epoxy finish. Plated fan guards with less than 1/4 inch spacing to cover motor and fan shall conform to OSHA Requirements.

Note: Before selecting a hazardous location electric heater refer to Article 500 or other applicable standard referenced in the National Electric Code.

Liquid-to-air heat exchanger

Optional built-in thermostat

Hazardous Location Rated Motor

Rating Definitions

CLASS I: Equipment does not have surface operating temperature in excess of the ignition temperature of the specific gas or vapor.

Application Examples:

- Offshore and land based drilling rigs, petroleum exploration and testing facilities
- Petroleum refineries, gasoline storage and dispensing areas
- Industrial firms that use flammable liquids in dip tanks for parts cleaning or other operations
- Petrochemical companies that manufacture chemicals from gas or oil
- Dry cleaning facilities where vapors from cleaning fluids may be present
- Aircraft hangers and fuel servicing areas
- Utility gas plants and operations involving storage and handling of liquefied petroleum or natural gas

GROUP C: Atmospheres such as but not limited to acetaldehyde, allyl alcohol, hydrogen sulfide, ethylene, carbon monoxide, or other gases or vapors of equivalent hazard.

GROUP D: Atmospheres such as but not limited to acetone, alcohol, gasoline, lacquer solvent vapors, natural gas, propane or other gases or vapors of equivalent hazard.

CLASS II: Equipment does not have surface temperature greater than the ignition temperature of the specified dust.

Application Examples:

- Coal preparation plants and other carbon handling or processing areas
- Grain elevators, flour and feed mills
- Plants which manufacture, use or store Magnesium or Aluminum powders
- Plants that have chemical or metallurgical processes.
- Producers of starch products or candy
- Spice grinding plants, sugar plants and cocoa plants

GROUP E: Atmosphere containing combustible metal dust regardless of resistivity, or other combustible dust of similar hazard characteristics having resistivity of less than 10^5 OHM - Centimeter.

GROUP F: Atmosphere containing carbon black, charcoal, coal or coke dust.

GROUP G: Atmospheres containing combustible dust having resistivity of 10^5 OHM-Centimeter or greater.

DIVISION I: A location in which ignitable concentrations of flammable material exist under normal operating conditions.

DIVISION II: Locations in which flammable materials will normally be confined within closed containers and escape only in the case of accidental rupture, breakdown or during maintenance operations. Any equipment approved for Division I is automatically also approved for Division II.

Standard Hazardous Location Models

MFG CATALOG NUMBER	MFG MODEL NUMBER	KW	BTUs	VOLTS	PH	AMPS	Control Voltage	Temp Rise °F	Air Throw	CFM	Recom'd Mounting Ht.	WT. (LBS)
07343502	HLA 12-208160-3.0-24	3	10240	208	1	16.3	24	16.5	24'	580	8'	167
07340002	HLA 12-208360-3.0-24			208	3	9.8						
07340102	HLA 12-240160-3.0-24			240	1	14.8						
07340202	HLA 12-240360-3.0-24			240	3	8.6						
07340302	HLA 12-480360-3.0-24			480	3	4.3						
07343602	HLA 12-208160-5.0-24	5	17100	208	1	26		27.6			8'	
07340502	HLA 12-208360-5.0-24			208	3	15.4						
07340602	HLA 12-240160-5.0-24			240	1	23.1						
07340702	HLA 12-240360-5.0-24			240	3	13.4						
07340802	HLA 12-480360-5.0-24			480	3	6.7						
07343702	HLA 12-208160-7.5-24	7.5	25600	208	1	38		41.4			8'	
07341002	HLA 12-208360-7.5-24			208	3	22.3						
07341102	HLA 12-240160-7.5-24			240	1	33.6						
07341202	HLA 12-240360-7.5-24			240	3	19.4						
07341302	HLA 12-480360-7.5-24			480	3	9.7						
07341502	HLA 16-208360-10.0-24	10	34150	208	3	29.3		21.7	40'	1500	10'	193
07341602	HLA 16-240160-10.0-24			240	1	44						
07341702	HLA 16-240360-10.0-24			240	3	25.5						
07341802	HLA 16-480360-10.0-24			480	3	12.7						
07342002	HLA 20-208360-15.0-24	15	51200	208	3	43.5		19.2	43'	2450	13'	
07342102	HLA 20-240360-15.0-24			240	3	38.1						
07342202	HLA 20-480360-15.0-24			480	3	19						
07342302	HLA 20-600360-15.0-24			600	3	15.2						
07342402	HLA 20-480360-20.0-24	20	68300	480	3	25.1		26.2				225
07342502	HLA 20-600360-20.0-24			600	3	20						
07342602	HLA 20-480360-25.0-24	25	85400	480	3	31.1		32.8				
07342702	HLA 20-600360-25.0-24			600	3	24.9						

Note: Products listed in this section are custom built and subject to 100% cancellation/restock charges.

Mounting Bracket Kits

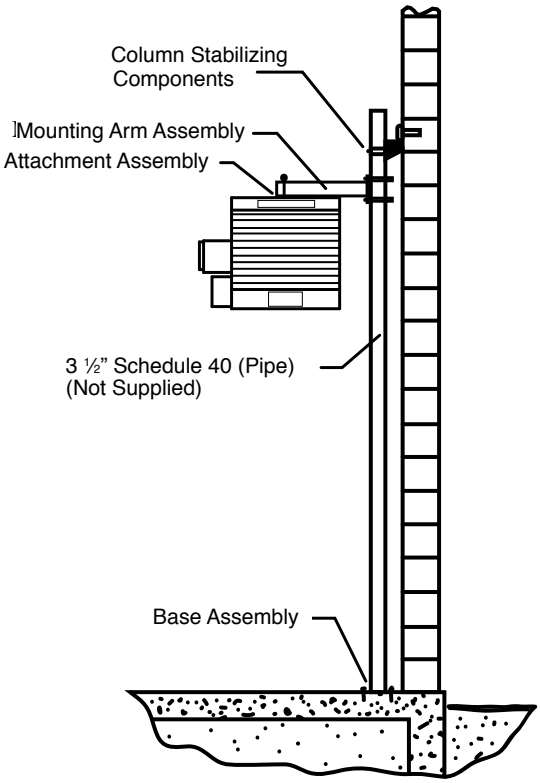

HLPM Pipe Mounting Kit
Particularly useful in buildings with insufficient strength to use other types of mounts. Requires 3 ½" pipe (4" O.D. - not supplied).

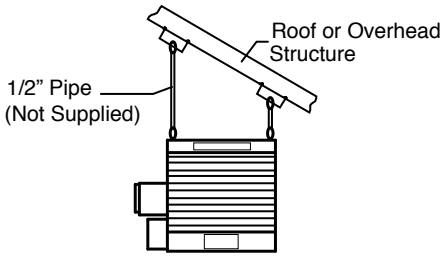

HLHM Hanging Mounting Kit
Simple and economical if adequate overhead structure exists. Requires 1/2" pipe, cut and threaded (not supplied)

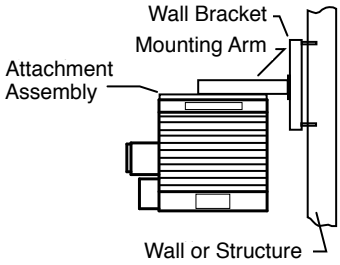

HLWM Wall Mounting Kit
Ideal for use in buildings that have substantial walls. Arm only can also be bolted directly to structural steel.

⚠ **WARNING:** This product can expose you to chemicals including nickel which is known to the State of California to cause cancer, and chromium, which is known to the State of California to cause birth defects and/or reproductive harm. For more information go to www.P65Warnings.ca.gov.

MFG CATALOG NUMBER	MFG MODEL NUMBER	USE WITH HEATERS	WT. (LBS)
07342802	HLPM37	3.0 kW - 7.5 kW	37
07342902	HLPM10	10.0 kW	38
07343002	HLPM1525	15.0 kW - 25.0 kW	40
07343102	HLHM	ALL	5
07343202	HLWM37	3.0 kW - 7.5 kW	27
07343302	HLWM10	10.0 kW	28
07343402	HLWM1525	15.0 kW - 25.0 kW	29

EPET Series and HLT Series Hazardous Location Thermostats For Single Phase

EPET Series

c UL US

HLT Series

c UL US

⚠ **WARNING:** This product can expose you to chemicals including nickel which is known to the State of California to cause cancer, and chromium, which is known to the State of California to cause birth defects and/or reproductive harm. For more information go to www.P65Warnings.ca.gov.

Features

- Celsius and Fahrenheit temperature scale
- Bi-Metal or capillary sensor
- Snap action switch
- Casting tapped top and bottom for ¾" conduit
- ½" thick cast aluminum housing
- All EPET optional thermostats manufactured with anti-static plastic
- Dimension 5.75" x 6.375" x 5.57"
- Made in U.S.A.

MFG CATALOG NUMBER	MFG MODEL NUMBER	DESCRIPTION	LOAD RATINGS	RANGE
05381002	EPETD8S	SPDT - Bi-Metal	22A @120-277VAC	50-90°F
05231502	HLT-1	SPDT - Capillary	22A @120-277VAC	40-110°F
Master ctn: 4 pcs, 24 llbs (varies slightly by model), 16" x 14.5" x 6"				
EPET Series incorporate plastic knob & Bi-Metal Sensor housing.				
HLT Series incorporates screwdriver temperature adjustment slot and all metal housing. External bulb and capillary sensor.				

Motor Rating	Rating	Rated*
(full load) 1 ½ HP at 250V	22A at 125-277VAC; 125 VA at 24VAC	Class I Group C & D, Class II Group E, F, G
*Thermostat is not rated for use in Group B environments.		

HLA Series Hazardous Location Fan Forced Unit Heater

Factory Installed Accessories & Physical Dimensions

SUFFIX	DESCRIPTION
T	In-Built single pole thermostat 40° - 100° F
120	Control transformer w/ primary fusing (Delete 24 suffix - add 120)
208	208/240V Control available on 208/240V units (Delete 24 suffix and add 208 OR 240)
240	
D	Disconnect Switch
P	Pilot Light

MFG MODEL	A	B	C		D	E	F	G
			3 ph.	1 ph.				
HLA 12	17 ¾	22 ⅜	19 ¾	20 ⅝	16 ¼	10 ½	14	3
HLA 16	20 ¾	26 ⅜	20 ¾	21 ⅝	20 ¼	11 ½	18	4
HLA 20	24 ¾	30 ⅜	22 ½	N/A	24 ¼	12 ½	22	4 ½

WARNING: This product can expose you to chemicals including nickel which is known to the State of California to cause cancer, and chromium, which is known to the State of California to cause birth defects and/or reproductive harm. For more information go to www.P65Warnings.ca.gov.

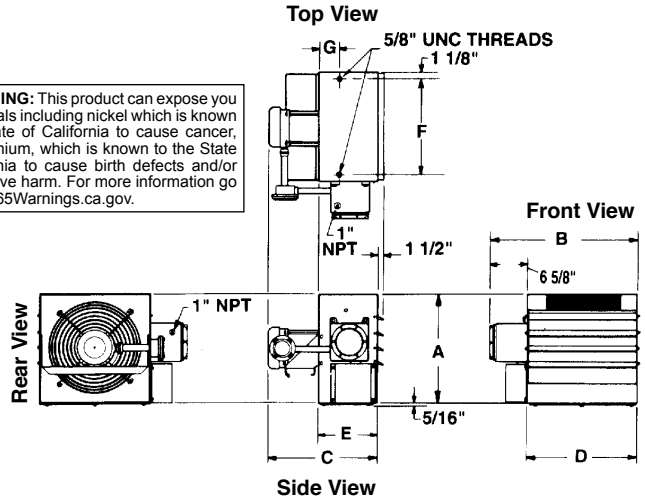

PHLA Series Portable Hazardous Location Fan Forced Unit Heater

Intertek

WARNING: This product can expose you to chemicals including nickel which is known to the State of California to cause cancer, and chromium, which is known to the State of California to cause birth defects and/or reproductive harm. For more information go to www.P65Warnings.ca.gov.

- 3.0 through 25 KW rating
- 208, 240, 480, 600 Volt available in selected capacities
- Cart has anti-static wheels to reduce the risk of static discharge
- Wheeled cart allows for easy maneuverability
- Cart has integrated fork-lift channels to provide ease of lifting on to ramps or trucks
- Excellent for providing seasonal heating in hazardous environments
- All units have disconnect switch, pilot light, and thermostat - standard
- 24 Volt control, transformer, and contactor in NEMA 7 enclosure
- Durable epoxy coating on heater housing
- Hazardous location unit mounted male / female plug
- Adjustable louvers; manual reset
- Made in U.S.A.

Standard Portable Hazardous Location Models

MFG CATALOG NUMBER	MFG MODEL NUMBER	KW	BTUs	VOLTS	PH	AMPS	TEMP RISE F	AIR THROW	CFM	WT. (LBS)
07393402	PHLA12-208160-3.0-24-TDP	3	10,250	208	1	16.3	16.5	24’	580	260
07393302	PHLA12-208360-3.0-24-TDP			208	3	9.8				
07393202	PHLA12-240160-3.0-24-TDP			240	1	14.8				
07393102	PHLA12-240360-3.0-24-TDP			240	3	8.6				
07393002	PHLA12-480360-3.0-24-TDP			480	3	4.3				
07394302	PHLA12-600360-3.0-24-TDP			600	3	3.5				
07392902	PHLA12-208160-5.0-24-TDP	5	17,100	208	1	26	27.6	24’	580	
07392802	PHLA12-208360-5.0-24-TDP			208	3	15.4				
07392702	PHLA12-240160-5.0-24-TDP			240	1	23.1				
07392602	PHLA12-240360-5.0-24-TDP			240	3	13.4				
07392502	PHLA12-480360-5.0-24-TDP			480	3	6.7				
07394202	PHLA12-600360-5.0-24-TDP			600	3	5.4				
07392402	PHLA12-208160-7.5-24-TDP	7.5	25,600	208	1	38	41.4	24’	580	
07392302	PHLA12-208360-7.5-24-TDP			208	3	22.3				
07392202	PHLA12-240160-7.5-24-TDP			240	1	33.6				
07392102	PHLA12-240360-7.5-24-TDP			240	3	19.4				
07392002	PHLA12-480360-7.5-24-TDP			480	3	9.7				
07394102	PHLA12-600360-7.5-24-TDP			600	3	7.8				
07391902	PHLA16-208360-10.0-24-TDP	10	34,150	208	3	29.3	21.7	40’	1500	305
07391802	PHLA16-240160-10.0-24-TDP			240	1	44				
07391702	PHLA16-240360-10.0-24-TDP			240	3	25.5				
07391602	PHLA16-480360-10.0-24-TDP			480	3	12.7				
07394002	PHLA16-600360-10.0-24-TDP			600	3	10.2				
07391502	PHLA20-208360-15.0-24-TDP	15	51,200	208	3	43.5	19.2	43’	2450	350
07391402	PHLA20-240360-15.0-24-TDP			240	3	38.1				
07391302	PHLA20-480360-15.0-24-TDP			480	3	19				
07393902	PHLA20-600360-15.0-24-TDP			600	3	15.2				
07391202	PHLA20-480360-20.0-24-TDP	20	68,300	480	3	25.1	26.2	43’	2450	
07393802	PHLA20-600360-20.0-24-TDP			600	3	20				
07391102	PHLA20-480360-25.0-24-TDP	25	85,400	480	3	31.1	32.8	43’	2450	
07393702	PHLA20-600360-25.0-24-TDP			600	3	24.9				

FEP Series Single Phase Hazardous Location Wall Convector

Standard Unit

Intertek

Unit with in-built EPET line voltage thermostat (Suffix T1 or T2)

WARNING: This product can expose you to chemicals including nickel which is known to the State of California to cause cancer, and chromium, which is known to the State of California to cause birth defects and/or reproductive harm. For more information go to www.P65Warnings.ca.gov.

T-2A SERIES SINGLE PHASE Class 1, Group B, C & D Division 1 & 2 280° C / 536° F							
MFG CATALOG NUMBER	MFG MODEL NUMBER	WATTS	BTUs	VOLTS	AMPS	CABINET LENGTH	WT. (LBS.)
04451402	FEP-1812-1RA	1800	6143	120	15.0	34”	50
04451502	FEP-1820-1RA			208	8.7		
04451602	FEP-1824-1RA			240	7.5		
04451702	FEP-1827-1RA			277	6.5		
04451802	FEP-1848-1RA			480	3.8		
04451902	FEP-3620-1RA	3600	12286	208	17.3	34”	54
04452002	FEP-3624-1RA			240	15.0		
04452102	FEP-3627-1RA			277	13.0		
04452202	FEP-3648-1RA			480	7.5		
04452302	FEP-3657-1RA			600	6.0		
04452402	FEP-3820-1RA	3800	12969	208	18.3	58”	80
04452502	FEP-3824-1RA			240	15.8		
04452602	FEP-38271-RA			277	13.7		
04452702	FEP-3848-1RA			480	7.9		
04452802*	FEP-7620-1RA	7600	25938	208	36.5*	58”	85
04452902*	FEP-7624-1RA			240	31.7*		
04453002*	FEP-7627-1RA			277	27.4*		
04453102	FEP-7648-1RA			480	15.8		
04453202	FEP-7657-1RA			600	12.7		

*Items may not be used with 22 Amp line voltage thermostat

T-3A SERIES SINGLE PHASE Class 1, Group B, C & D Division 1 & 2 180° C / 356° F							
04453302	FEP-0812-1RA	800	2730	120	6.7	34”	50
04453402	FEP-0820-1RA			208	3.8		
04453502	FEP-0824-1RA			240	3.3		
04453602	FEP-0827-1RA			277	2.9		
04453702	FEP-0848-1RA			480	1.7		
04453802	FEP-1612-1RA	1600	5460	120	13.3	34”	54
04453902	FEP-1620-1RA			208	7.7		
04454002	FEP-1624-1RA			240	6.7		
04454102	FEP-1627-1RA			277	5.8		
04454202	FEP-1648-1RA			480	3.3		
04454302	FEP-1657-1RA			600	2.7		
04454402	FEP-1712-1RA	1700	5802	120	14.2	58”	80
04454502	FEP-1720-1RA			208	8.2		
04454602	FEP-1724-1RA			240	7.1		
04454702	FEP-1727-1RA			277	6.1		
04454802	FEP-1748-1RA			480	3.5		
04454902	FEP-3420-1RA	3400	11604	208	16.3	58”	85
04455002	FEP-3424-1RA			240	14.2		
04455102	FEP-3427-1RA			277	12.3		
04455202	FEP-3448-1RA			480	7.1		
04455302	FEP-3457-1RA			600	5.7		

- Cabinet size 18” high, 9” wide
- Bottom In - Top Out air flow
- Wall mounting bracket supplied
- Units can not be operated in room ambients exceeding 104°F (40°C)
- Heavy duty 16 gauge steel with gray epoxy textured powder coated finish
- 9” minimum clearance from bottom of heater to floor required
- Stainless steel cartridge element inserted into Aluminum finned Copper sheath
- Standard unit (without EPET thermostat or control section) is NEMA 4 rated
- Made in U.S.A.

Factory Installed Control Options

SUFFIX*	DESCRIPTION
T1	EPETP8S single pole thermostat factory mounted to 120V - 480V units. (50°F - 90°F)
T2	EPETP8D double pole thermostat factory mounted to 120V - 480V units. (50°F - 90°F)

*Remove - RA suffix and add new suffix. Suffix “T” is 22 Amps maximum.

For 120V-480V thermostat, see page 9.

Note: All EPET / T1 / T2 optional thermostats manufactured with anti-static plastic

FEP Series Three Phase Hazardous Location Wall Convector

- Cabinet size 18” high, 9” wide
- Bottom In - Top Out air flow
- Wall mounting bracket supplied
- Units can not be operated in room ambients exceeding 104°F (40°C)
- Heavy duty 16 gauge steel with gray epoxy textured powder coated finish
- 9” minimum clearance from bottom of heater to floor required
- Stainless steel cartridge element inserted into Aluminum finned Copper sheath
- Standard unit (without EPET thermostat or control section) is NEMA 4 rated
- Made in U.S.A.

T-2A SERIES THREE PHASE Class 1, Group B, C, & D Divisions 1 & 2 280° C / 536° F							
MFG CATALOG NUMBER	MFG MODEL NUMBER	WATTS	BTUs	VOLTS	AMPS	CABINET LENGTH	WT. (LBS.)
04830502	FEP-1820-3RA	1800	6143	208	5.0	34”	50
04830602	FEP-1824-3RA			240	4.3		
04862202	FEP-1848-3RA			480	2.2		
04830702	FEP-3620-3RA	3600	12286	208	10.0	34”	54
04830802	FEP-3624-3RA			240	8.7		
04862302	FEP-3648-3RA			480	4.3		
04830902	FEP-3820-3RA	3800	12969	208	10.5	58”	80
04831002	FEP-3824-3RA			240	9.1		
04862402	FEP-3848-3RA			480	4.6		
04831102	FEP-7620-3RA	7600	25938	208	21.1	58”	85
04831202	FEP-7624-3RA			240	18.3		
04862502	FEP-7648-3RA			480	9.2		

T-3A SERIES THREE PHASE Class 1, Group B, C & D Division 1 & 2 180° C / 356° F							
04831302	FEP-0820-3RA	800	2730	208	2.2	34”	50
04831402	FEP-0824-3RA			240	1.9		
04862602	FEP-0848-3RA			480	0.9		
04831502	FEP-1620-3RA	1600	5460	208	4.4	34”	54
04831602	FEP-1624-3RA			240	3.8		
04862702	FEP-1648-3RA			480	1.9		
04831702	FEP-1720-3RA	1700	5802	208	4.7	58”	80
04831802	FEP-1724-3RA			240	4.1		
04862802	FEP-1748-3RA			480	2.0		
04831902	FEP-3420-3RA	3400	11604	208	9.4	58”	85
04832002	FEP-3424-3RA			240	8.2		
04862902	FEP-3448-3RA			480	4.1		

Note: C1-TD and C1-TDP are only options available for 3 phase units.
T1 and T2 option not available on 3 phase models

Intertek

Standard Unit

⚠ **WARNING:** This product can expose you to chemicals including nickel which is known to the State of California to cause cancer, and chromium, which is known to the State of California to cause birth defects and/or reproductive harm. For more information go to www.P65Warnings.ca.gov.

Intertek

Unit with optional control section containing disconnect, pilot light, and thermostat (Suffix C1-TDP)

Note: Controls mounted on the left side only

Factory Installed Control Options

SUFFIX**	DESCRIPTION
C1-TD	Control section with transformer, 24V contactor, SP thermostat (40°F - 100°F) and disconnect switch (all units)
C1-TDP	Control section with transformer, 24V contactor, SP thermostat (40°F - 100°F), disconnect switch & pilot light (all units)

**Remove - RA suffix and add new suffix (Not NEMA washdown rated or rated for Group B atmospheres)

Remote Mounted Hazardous Location Thermostats For Single Phase Power Only

HLT Series

⚠ **WARNING:** This product can expose you to chemicals including nickel which is known to the State of California to cause cancer, and chromium, which is known to the State of California to cause birth defects and/or reproductive harm. For more information go to www.P65Warnings.ca.gov.

MFG CATALOG NUMBER	MFG MODEL NUMBER	DESCRIPTION	LOAD RATINGS	RANGE
05380702	EPETD8D	DPDT - Bi-Metal	22A @120-277VAC	50-90°F
05381002	EPETD8S	SPDT - Bi-Metal	22A @120-277VAC	50-90°F
05280702	EPETP8D	DPDT - Bi-Metal	22A @120-480VAC	50-90°F
05280602	EPETP8S	SPDT - Bi-Metal	22A @120-480VAC	50-90°F
05231502	HLT-1	SPDT - Capillary	22A @120-277VAC	40-110°F
05231602	HLT-2	DPDT - Capillary	22A @120-277VAC	40-110°F
Master ctn: 4 pcs, 24 lbs (varies slightly by model), 16” x 14.5” x 6”				
EPET Series incorporates plastic knob & Bi-Metal Sensor housing.				
HLT Series incorporates screwdriver temperature adjustment slot and all metal housing. External bulb and capillary sensor.				

Note: All EPET / T1 / T2 optional thermostats manufactured with anti-static plastic

EPET Series Parameters

⚠ **WARNING:** This product can expose you to chemicals including nickel which is known to the State of California to cause cancer, and chromium, which is known to the State of California to cause birth defects and/or reproductive harm. For more information go to www.P65Warnings.ca.gov.

Motor Rating	Rating	Rated*
(full load) 1 ½ HP @ 250V	22A @ 125-277VAC; 125 VA @ 24VAC	Class I Group C & D, Class II Group E, F, G
Thermostat is not rated for use in Group B environments.		

Dimensions	Finish	Type
H: 5 ⅝ ,W: 6 ⅜, D: 4 ½	Silver-Gray	Single or Double Pole

5500 Series Washdown Fan Forced Unit Heater

The Washdown Series unit heaters are electric unit heaters constructed for use in areas that require washing or hosing of equipment due to dirty or dusty industrial environments in non-hazardous locations. The totally enclosed water-tight construction made with corrosion-resistant material make this series ideal for industrial heating applications. The Washdown Series is constructed with all built-in controls and safety temperature controls wired in a non-metallic Nema 4x control panel with single-point power connections.

- Heavy-duty 304 16 gauge stainless steel shroud
- 316 stainless construction available
- Nema 4x non-metallic control panel
- 24-Volt control
- 3-position switch (off-heat-fan)
- Capillary thermostat with stainless steel sensor
- Automatic reset thermal cutout
- Totally enclosed U.L. listed motor
- Pilot light (power on indicator)
- Stainless steel finned tubular element. Constructed of 304 or 316 stainless rod and fins
- Control panel on bottom of unit for ease of installation and service
- Disconnect switch with enclosure door interlock
- Front grill rotates to direct airflow
- Single-point power connection
- Fan Blade Aluminum
- Epoxy painted cold roll steel model available, consult factory
- Meets all U.L., NEC, and OSHA requirements (when installed as directed)
- Corrosion-resistant in high humidity and water-saturated areas (for areas where corrosion resistance is needed in non-explosive areas, contact factory for heater applications and optional materials)
- Thermostat temp range: 40°-110°F
- Made in U.S.A.

Intertek

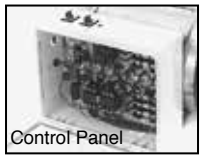
Control Panel

⚠ **WARNING:** This product can expose you to chemicals including nickel which is known to the State of California to cause cancer, and chromium, which is known to the State of California to cause birth defects and/or reproductive harm. For more information go to www.P65Warnings.ca.gov.

Mounting Bracket Kits & Product Dimensions

SIZE KW	MFG CATALOG NUMBER	STAINLESS Steel COMBINATION BRACKET	MFG CATALOG NUMBER	WALL MTG. BRACKET *	MFG CATALOG NUMBER	HANGING BRACKET *	MFG CATALOG NUMBER	PIPE MTG. BRACKET *
3.3-15	07136702	A5520/UHB	07137202	W5520/WMK	07137002	H5520/HMK	07136802	P5520/PMK
20-48		----	07137302	W5550/WMK	07137102	H5550/HMK	07136902	P5550/PMK

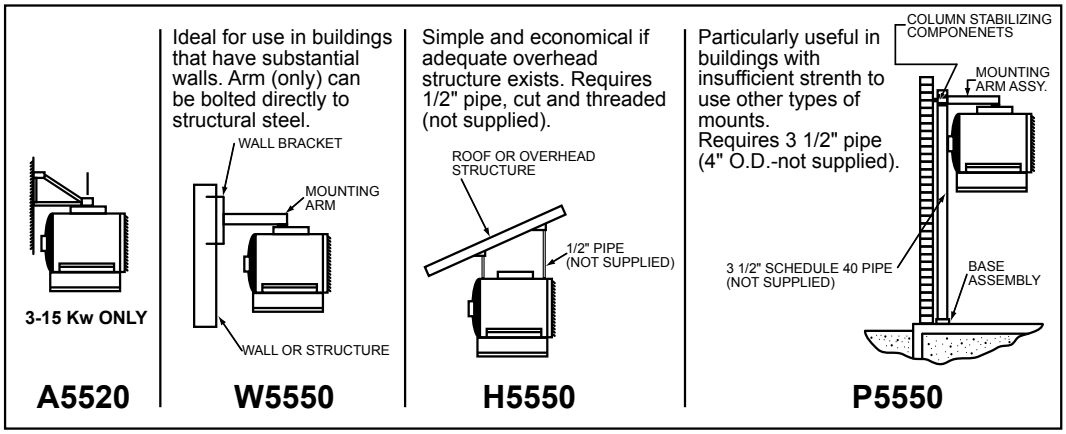

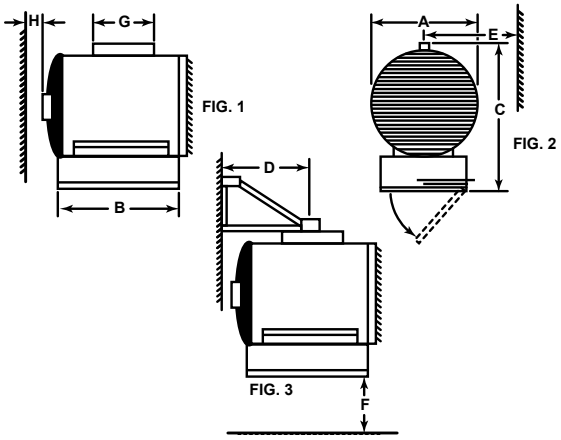

Heater KW	Heater Dimension in Inches unless otherwise stated.							
	A	B	C	D	E	F	G	H
3-7.5	12.00	18.00	19.75	15.25	16.25	6 ft.	8.00	6.00
10-15	14.00	19.00	21.75	15.25	18.00		8.00	6.00
20-30	16.00	27.00	28.75	19.50	17.50		15.50	4.50
40-48	18.00	31.00	30.75	19.50	19.50		21.75	2.75

Product Specifications & Standard Washdown Models

Enclosure and Motor:
Element housing shall be 16 gauge 304 or 316 stainless steel shroud. The outlet grill and louver assembly shall be 304/316 stainless steel and rotate for direction of discharge air. The heater shall have a 304/316 stainless steel inlet grill and fan guard. The motor shall be totally enclosed, permanently lubricated and designed to resist moisture and corrosion. The fan blade shall be aluminum.

Element:
The heating element shall be 304 or 316 stainless steel tube with 304/316 stainless steel fin material helically attached to the tube for even heat transfer. The element designed with the highest quality nickel-chromium resistance wire embedded in compacted efficient dielectric to ensure proper heat transfer.

Control Panel:
The control enclosure shall be non-metallic Nema 4X control panel water-tight and dust- tight. The enclosure and elements are attached to the control panel with stainless steel fasteners. Standard control components are factory mounted and wired with access through control panel door on bottom of heater assembly. A standard door interlock disconnect switch shall be factory mounted and wired for safety.

Controls:
All controls shall be factory mounted and wired in Nema 4X panel. Terminal block, 24 Volt transformer, high temperature limits, contactor and fusing if required by NEC are mounted and wired in control panel. A three-position switch (Off-Heat-Fan) shall be mounted on side of control panel for access from outside of panel. A pilot light to indicate power is on for safety shall be located on side of control panel. A wall mounted Nema 4X thermostat is an optional accessory.

Mounting Bracket:
A formed 304/316 stainless steel bracket shall be used on 3.3 thru 15 KW units. A cast iron epoxy painted bracket shall be used on 20 thru 48 KW units. Above brackets shall be combination wall/ceiling type. Optional mounting brackets are available.

MFG CATALOG NUMBER	MFG MODEL NUMBER	KW	BTUs	VOLTS	PH	AMPS	CONTROL VOLTAGE	TEMP RISE °F	AIR THROW	CFM	WT. (LBS)
07130402	F1F5503T	3.3	11200	208	1	15.9	24	26	20’	400	58
07130502	F3F5503T			208	3	9.2					
07130602	H1H5503T			240	1	13.7					
07130702	H3H5503T			240	3	7.9					
07130802	G1G5503T			277	1	11.9					
07130902	P3P5503T			480	3	4					
07131102	F1F5505T	5	17100	208	1	24.1		40			
07131202	F3F5505T			208	3	13.9					
07131302	H1H5505T			240	1	20.8					
07131402	H3H5505T			240	3	12.1					
07131502	G1G5505T			277	1	18.1					
07131602	P3P5505T			480	3	6.1					
07131802	F1F5507T	7.5	25600	208	1	36.1		60			
07131902	F3F5507T			208	3	20.8					
07132002	H1H5507T			240	1	31.3					
07132102	H3H5507T			240	3	13.1					
07132202	G1G5507T			277	1	27.1					
07132302	P3P5507T			480	3	9.1					
07132502	F1F5510T	10	34130	208	1	47.8		45	28’	700	64
07132602	F3F5510T			208	3	27.7					
07132702	H1H5510T			240	1	41.2					
07132802	H3H5510T			240	3	24.1					
07132902	G1G5510T			277	1	36.1					
07133002	P3P5510T			480	3	12.1					
07133902	F1F5515T	15	51200	208	1	72.1		68			
07134002	F3F5515T			208	3	41.7					
07134102	H1H5515T			240	1	62.5					
07134202	H3H5515T			240	3	36.1					
07134402	P3P5515T			480	3	18.1					
07134602	F3F5520T	20	68260	208	3	55.6		45	35’	1400	92
07134702	H3H5520T			240	3	48.2					
07134802	P3P5520T			480	3	24.1					
07135002	F3F5525T	25	85325	208	3	69.5		56			
07135102	H3H5525T			240	3	60.2					
07135202	P3P5525T			480	3	30.1					
07135402	F3F5530T	30	102390	208	3	83.4		68			
07135502	H3H5530T			240	3	72.3					
07135602	P3P5530T			480	3	36.1					
07136002	P3P5540T	40	136520	480	3	48.2		70	42’	1800	126
07136402	P3P5548T	48	163824	480	3	57.8		84			

Remote Rain-Tight Thermostat

Intertek

MFG CATALOG NUMBER	MFG MODEL NUMBER	DESCRIPTION
05234202	TW155A	1 POLE, 40-110 deg F, 22Amp
05234302	TW255A	2 POLE, 40-110 deg F, 22Amp

⚠ **WARNING:** This product can expose you to chemicals including nickel which is known to the State of California to cause cancer, and chromium, which is known to the State of California to cause birth defects and/or reproductive harm. For more information go to www.P65Warnings.ca.gov.

- NEMA 4X Construction with Stainless Steel Hardware
- Made in U.S.A. with domestic and foreign components

3.3 KW THROUGH 48 KW HORIZONTAL DISCHARGE SUSPENDED FAN FORCED UNIT HEATERS AVAILABLE IN 1 OR 3 PHASE FOR ALL STANDARD VOLTAGES FROM 208V TO 480V.

FACTORY INSTALLED OPTIONS:

- 24 Volt transformer on 3 KW to 15KW units to convert from line voltage to low voltage remote thermostat operation.
- Summer fan switch to operate the fan only.
- Fan delay switch to purge all residual heat from the unit after the heating element has cycled off.
- Powder coated epoxy finish for corrosive atmospheres.
- Disconnect switch.
- Made in U.S.A.

MAXIMUM RECOMMENDED MOUNTING HEIGHT	
3 - 10 KW	9 FT.
12 - 15 KW	10 FT.
20 - 30 KW	13 FT.
40 - 48 KW	16 FT.

Intertek

⚠ **WARNING:** This product can expose you to chemicals including nickel which is known to the State of California to cause cancer, and chromium, which is known to the State of California to cause birth defects and/or reproductive harm. For more information go to www.P65Warnings.ca.gov.

CONSTRUCTION:
Heavy gauge welded steel cabinet with powder coated finish and control compartment with a hinged and latched access door, simplifying wiring installation and maintenance

HEATING ELEMENT:
Circular copper clad steel sheath element with continuously brazed steel fins formed to match the air delivery pattern of the fan blade

OVERHEAT PROTECTION:
All units come equipped with automatic resetting type limit controls to de-energize the heater should an over-temperature situation occur

FAN and MOTOR:
Totally enclosed, single phase, permanently lubricated, thermally protected motors with unit bearings on 3 KW - 10 KW models and sleeve bearings on 12.5 KW - 48 KW models - mounted with rubber insulators to minimize vibration and noise. Fan assembly enclosed by a heavy gauge, close spaced, chrome plated wire guard

LOUVER ASSEMBLY:
Louvers are individually adjustable for directional control of air flow and the entire assembly can be repositioned in the field from down flow to up flow or left / right directional air flow

TEMPERATURE CONTROLS:
20 KW through 48 KW units and all 480V have built in 24 Volt transformer for low voltage remote thermostat application. 25 KW through 48 KW models available in 2-stage on special order (consult factory)

INSTALLATION:
Unit Heaters can be mounted with the motor shaft from horizontal to downward at 45° off horizontal. Pre-drilled holes and installed threaded nuts provided to allow hanging by threaded rods - ¼" for units up to 15 KW and 5⁄16" for 20 KW units and larger. Optional wall / ceiling mounting brackets are available for all units

NOTE: Louver assembly is square and mounted with screws. Louver can be removed and repositioned for four (4) directional air flow - left - right - up - down with the heater in the horizontal position.

Product Dimensions & Model Number Designation

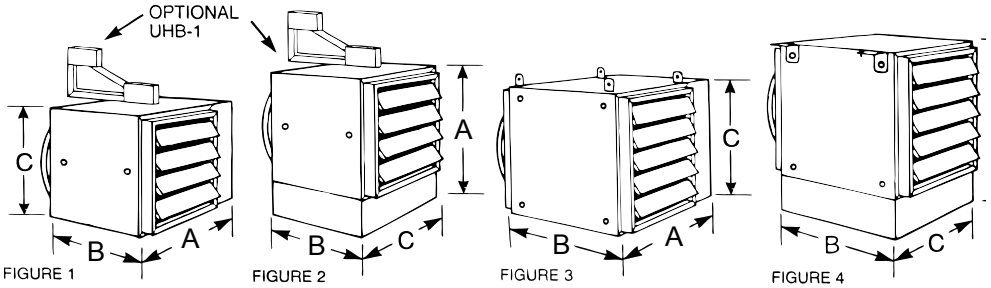

3.3 KW THROUGH 15 KW UNIT HEATERS

20 KW THROUGH 48 KW UNIT HEATERS

Dimensions	A	B	C
Figure 1: 3.3, 5, 7.5, 10 KW	20"	11"	13"
Figure 2: 12.5, 15 KW	22"	11"	15"
Figure 3: 20, 25, 30 KW	24"	17"	17"
Figure 4: 40, 48 KW	26"	23"	19"

Figures 3 & 4 shown with standard mounting tabs for units over 20 KW. Optional UHB-3 and UHB-4 wall brackets are available. 3.3 KW thru 15 KW units can be mounted using ¼" threaded rod. 20 KW thru 48 KW units can be mounted using 5⁄16" threaded rod.

Factory & Field Installed Accessories

FACTORY INSTALLED OPTIONS	
SUFFIX	DESCRIPTION
CA1F	Heat purge fan delay switch includes 24v transformer and contactor on 208-240-277 volt units
CA2F	Heat purge fan delay switch includes 120v transformer and contactor on 208--240-277 volt units
F	Heat purge fan delay switch on 480v units CA1 low voltage transformer and contactor included
S	Summer Fan Switch
CA1	24v Transformer (3.3 KW - 15 KW units) & Contactor
CA2	120v Transformer (3.3 KW - 15 KW units) & Contactor
E	Epoxy Coating
T	SPST Thermostat (40°F - 110°F)
D	30 Amp Disconnect Switch: 0-24 Amps
	40 Amp Disconnect Switch: 24.1-32 Amps
	80 Amp Disconnect Switch: 32.1-64 Amps
	100 Amp Disconnect Switch: 64.1-80 Amps

FIELD INSTALLED ACCESSORIES		
MFG CATALOG NUMBER	MFG MODEL NUMBER	DESCRIPTION
06462302	DCS303	30 Amp Disconnect Kit: 0-24 Amps
06462402	DCS403	40 Amp Disconnect Kit: 24.1-32 Amps
06462502	DCS803	80 Amp Disconnect Kit: 32.1-64 Amps
06462602	DCS1003	100 Amp Disconnect Kit: 64.1-80 Amps
06879902	TUH1	25 Amp SPST Thermostat Kit (40°F - 110°F)
06991002	UHB-1	Wall / Ceiling Bracket 3.3 KW - 15 KW units
06991102	UHB-3	Wall / Ceiling Bracket 20 KW - 30 KW units
06991202	UHB-4	Wall / Ceiling Bracket 35 KW - 48 KW units

UH Series Horizontal Fan Forced Unit Heater

HOW TO DESIGNATE A MODEL:

H 2 H UH 10 C A 1

Element Volts	Phase	Motor Voltage	Model Series	Element KW	Control System	Transformer	Control Volts
F = 208 H = 240 HF = 240/208 G = 277 P = 480	1 = 1-Phase 2 = 1 or 3-Ph. 3 = 3-Phase	F = 208 H = 240 B = 240 / 208 G = 277 P = 480	UH		O = None C = Contactor	O = None A = Included	1 = 24 2 = 120 3 = Element Voltage 4 = 240

Factory Installed Options (use as a suffix on model designation):
S = Summer Fan Switch, F = Fan Delay, D = Disconnect, T = Built-in Thermostat, E = Epoxy Coated

Field Installed Options:
Disconnect Switch, Built-in Thermostat, & Wall / Ceiling Bracket

Standard Product Models

MFG CATALOG NUMBER	MFG MODEL NUMBER	KW	BTUs	VOLTS	PH	AMPS	CONTROL VOLTS	TEMP RISE °F	AIR THROW	CFM	RECOM'D MOUNTING HT.	WT. (LBS)
06446002	F1FUH03003	3.3	11200	208	1	15.9	208	26	26'	400	9'	36
06446602	H1HUH03003			240	1	13.8	240					
06447202	G1GUH03003			277	1	11.9	277					
07114802	H3HUH03C03			240	3	7.9	240					
07114902	F3FUH03C03			208	3	9.2	208					
07114002	P3PUH03CA1			480	3	4	24					
06446102	F1FUH05003	5	17100	208	1	24.1	208	40	26'	400	9'	36
06446702	H1HUH05003			240	1	20.8	240					
06447302	G1GUH05003			277	1	18.1	277					
06449302	F2FUH05C03			208	1 or 3	24.1 / 14.0	208					44
06449402	H2HUH05C03			240	1 or 3	20.8 / 12.1	240					
06448802	P3PUH05CA1			480	3	6.1	24					
07180502	F1FUH07CA1	7.5	25600	208	1	36.1	24	42	36'	575	9'	40
07173702	H1HUH07CA1			240	1	31.3	24					41
07151802	G1GUH07CA1			277	1	27.1	24					41
06447902	F3FUH07C03			208	3	20.8	208					44
06449502	H2HUH07C03			240	1 or 3	31.3 / 18.1	240					
06448902	P3PUH07CA1			480	3	9.1	24					
07170902	F1FUH10CA1	10.0	34100	208	1	48.1	24	55	36'	575	9'	42
06808402	H1HUH10CA1			240	1	41.7	24					
07173802	G1GUH10CA1			277	1	36.1	24					
06449602	F2FUH10C03			208	1 or 3	48.1 / 27.8	208					
06449702	HF2BUH10C03	10 / 7.5	34100	240	1 or 3	41.7 / 24.1	240	55				45
			25600	208	1 or 3	36.1 / 20.8	208	42				
07114202	P3PUH10CA1	10.0	34100	480	3	12.1	24	55				51
06446402	F1FUH12C03	12.5	42600	208	1	60.1	208	49	45'	800	10'	45
06447002	H1HUH12C03			240	1	52.1	240					
06448102	F3FUH12C03			208	3	34.7	208					
06448602	H3HUH12C03			240	3	30.1	240					
07114302	P3PUH12CA1			480	3	15.1	24					
06446502	F1FUH15CO3	15.0	51200	208	1	72.1	208	59	45'	800	10'	54
06447102	H1HUH15C03			240	1	62.5	240					
06448202	F3FUH15C03			208	3	41.7	208					
06448702	H3HUH15C03			240	3	36.1	240					
07114402	P3PUH15CA1			480	3	18.1	24					
06883002	F1FUH20CA1*	20.0	68300	208	1	96.2	24	47	56'	1350	13'	55
06884202	H1HUH20CA1*			240	1	83.3	24					
06883102	F3FUH20CA1			208	3	55.6	24					
06884302	H3HUH20CA1			240	3	48.2	24					
06883202	P3PUH20CA1			480	3	24.1	24					
06884402	F1FUH25CA1*	25.0	85300	208	1	120.2	24	58	56'	1350	13'	55
06883302	H1HUH25CA1*			240	1	104.2	24					
06884502	F3FUH25CA1			208	3	69.5	24					
06883402	H3HUH25CA1			240	3	60.2	24					
06884602	P3PUH25CA1			480	3	30.1	24					
06884702	H1HUH30CA1	30.0	102390	240	1	125	24	70	56'	1350	13'	60
06883602	F3FUH30CA1*			208	3	83.4	24					
06884802	H3HUH30CA1			240	3	72.3	24					
06883702	P3PUH30CA1			480	3	36.1	24					
06884002	P3PUH40CA1	40.0	136500	480	3	48.2	24	55	56'	2275	16'	75
06887802	P3PUH48CA1	48.0	163800	480	3	57.8	24	67	56'	2275	16'	78

*Disconnect not available

3.3 KW THROUGH 50 KW SUSPENDED FAN FORCED UNIT HEATERS AVAILABLE IN 1 OR 3 PHASE FOR ALL STANDARD VOLTAGES FROM 208V TO 480V THAT CAN BE MOUNTED TO PROVIDE HORIZONTAL OR VERTICAL DISCHARGE

Horizontal Discharge

Intertek

Vertical Discharge

CONSTRUCTION:

Heavy 18 gauge welded steel cabinet with powder coated finish and control compartment housing a master terminal board with a hinged and latched access door, simplifying wiring, installation & maintenance.

HEATING ELEMENT:

Copper clad steel sheath element with continuously brazed steel fins formed to allow side draw through air flow.

OVERHEAT PROTECTION:

All units come equipped with automatic reset type limit controls to de-energize the heater should an over-temperature situation occur.

FAN and MOTOR:

Totally enclosed, 1-speed, 1-phase, permanently lubricated, thermally protected motors with unit bearings on 3 KW - 20 KW models. Totally enclosed, 2-speed, 1-phase, permanently lubricated, thermally protected motors with sleeve bearings on 25 KW - 50 KW models. Fan over-ride purges unit of residual heat at shutdown.

LOUVER ASSEMBLY:

Louvers are individually adjustable for directional control of air flow up to 15° from straight horizontal. Optional diffusers available for down flow (vertical discharge) applications.

TEMPERATURE CONTROLS:

Optional low voltage and line voltage thermostats available with an adjustable temperature range of 40°F to 110°F. Units with model numbers ending in CA1 are factory wired for low voltage controls. 25 KW through 50 KW units are designed for two stage heating operation.

INSTALLATION:

Unit Heaters can be mounted for horizontal or vertical discharge.Applications up to 6000 ft. See UH Series above 6000 ft.

FEATURES:

- Made in U.S.A.

FIELD INSTALLED OPTIONS:

- In-unit or wall mounted temperature control thermostats low or line voltage
- Summer fan switch to operate the fan only
- Power disconnect switch
- Heat stratification thermostat

⚠ **WARNING:** This product can expose you to chemicals including nickel which is known to the State of California to cause cancer, and chromium, which is known to the State of California to cause birth defects and/or reproductive harm. For more information go to www.P65Warnings.ca.gov.

Taskmaster Dimensions

KW RATING	DIMENSIONS (inches)		
	H	W	D
3.3 - 5.0	17 ¾	14 15/32	6 ½
7.5 - 10.0	24 5/16	21 ½	6 ½
15.0 - 20.0	28 11/16	21 ½	6 ½
25.0 - 50.0	34	29 ¼	10 1/16

Installing the Taskmaster Series

DETERMINING HEATER REQUIREMENTS

Calculate the heating loads using the NEMA handbook or ASHRAE guide. Then determine the quantity and size of unit heaters to be used. To maintain uniform heat and reduce stratified air, it is recommended that the total CFM of the units turn the air over approximately 3 times per hour. In instances where a large group of people are located and normally in the same area, use a large number of lower KW unit heaters. In warehouse areas or storage rooms where heat distribution and constant temperatures are less important, use fewer heaters of higher capacity.

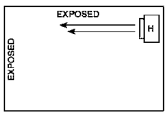

Figure A

HORIZONTAL MOUNT

Small rooms can be heated by one unit heater. Where two walls are exposed, heaters should be mounted as shown in Figure A. In larger rooms, units should he located so their air streams wipe exposed walls without blowing at them. Units should be located so that the air stream of one supports that of another thus setting up a circulatory air movement shown in Figure B. (Distance between units to be approximately 1-1/2 times published air throw.) Units should not be mounted horizontally in areas having ceiling heights in excess of 15-18 ft.

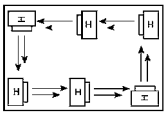

Figure B

VERTICAL MOUNT

Units should be mounted vertically in high bay areas, or where heater location would not interfere with plant operation or traffic, Heaters should be situated to provide free air circulation. Size and selection of units should be based on recommended mounting height. Optional diffusers may best be employed to reduce high air velocity and at the same time disperse heated air in a uniform pattern. When unit heaters are used to combat cold air inrush from opened loading dock doors, one or more units should be arranged to blow warm air across opening (Figure C).

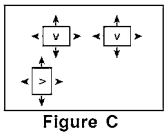

Figure C

DUAL MOUNTING

Where square footage is large and comfort essential, both horizontal and vertical installations may best serve your requirements as Figure D demonstrates.

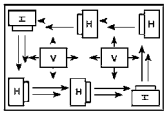

Figure D

Note: Products in this section with factory installed controls are subject to 100% cancellation/restocking charges.

Diffuser Options

	DESCRIPTION	MFG CATALOG NUMBER	MFG MODEL NUMBER	KW USED	MAX MOUNTING HEIGHT (ft.)		DIMENSION A (feet)		DIMENSION B (feet)	WT. (LBS)
1	**Louver Diffuser (Standard)** Louvers can be individually adjusted for rectangular coverage over doorways as an air curtain, or to meet rectangular floor pattern heating requirements.	NA	Standard	3.3-5 7.5-10 25-30 40-50	9 12 18 22 24		20 40 52 75 84		10 22 30 42 47	NA
2	**General Distribution (No Diffuser)** The 5100 air chute venturi permits general down flow air pattern distribution as required at a higher mounting height.	NA	Not Required	3.3-5 7.5-10 25-30 40-50	9 12 18 22 24		15 30 40 55 64		NA	NA
3	**Anemostat Diffuser (Optional)** For applications where draft restriction is required at lower unit mounting heights.	06926802 06811802 06811802 07220702	AD5120 AD5150 AD5150 AD5175	10-20 25-30 40-50 60-70	15 17 20 31		38 50 60 -		NA	10 12 37
4	**Radial Diffuser (Optional)** Individually adjustable fins permit increased floor coverage at 45° open. Additional throw is accomplished when fins are 90° vertical. (Please allow for higher mounting heights.)	06926602 06926602 06926702 06926702 07220802	RD5120 RD5120 RD5150 RD5150 RD5175	7.5-20 25-50 60-70	45° 10 14 20 18 26	90° 14 21 30 28 36	45° 36 42 62 68 72	90° 30 35 44 54 60	NA	12 14 39

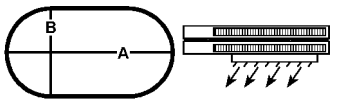

Description 1
Louver Diffuser

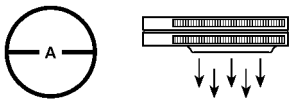

Description 2
No Diffuser

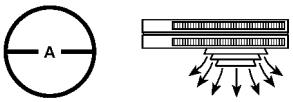

Description 3
Anemostat Diffuser

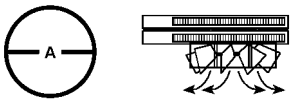

Description 4
Radial Diffuser

Mounting Brackets & Model Designator

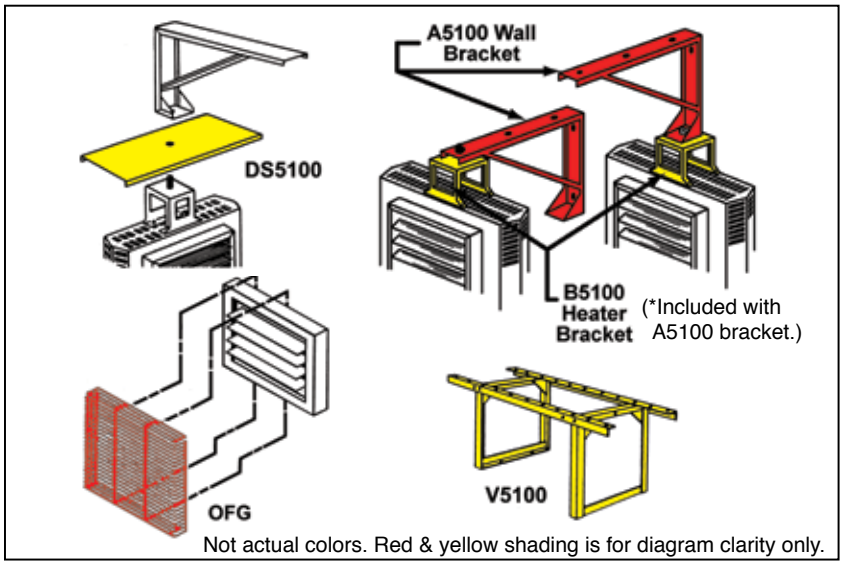

Not actual colors. Red & yellow shading is for diagram clarity only.

MOUNTING BRACKETS			
MFG CATALOG NUMBER	MFG MODEL NUMBER	MODEL SIZE	WT. (LBS)
06926902	A5105	3.3 KW TO 5.0 KW	9
06927002	A5120	7.5 KW TO 20.0 KW	13
06927102	A5150	25.0 KW TO 50.0 KW	16
06886202	B5105	3.3 KW TO 20.0 KW	3
06886302	B5150	25.0 KW TO 50.0 KW	8
06928402	V5105	3.3 KW TO 5.0 KW	9
06928502	V5120	7.5 KW TO 20.0 KW	13
06928602	V5150	25.0 KW TO 50.0 KW	16
DUST SHIELD			
06928702	DS5105	3.3 KW TO 5.0 KW	3
06928802	DS5120	7.5 KW TO 20.0 KW	4
06812202	DS5150	25.0 KW TO 50.0 KW	5
FAN GUARD			
07065402	OFG5101	3.3 KW TO 5.0 KW	3
07065502	OFG5102	7.5 KW TO 20.0 KW	4
07065602	OFG5103	25.0 KW TO 50.0 KW	5

HOW TO DESIGNATE A MODEL:

HF 2 B 51 10 C A 1

Element Volts	Phase	Motor Voltage	Model Series	Element KW	Control System	Transformer	Control Volts
F = 208 H = 240 HF = 240/208 G = 277 P = 480	1 = 1-Phase 2 = 1 or 3-Ph. 3 = 3-Phase	F = 208 H = 240 B = 240 / 208 G = 277 P = 480	51		Blank = None C = Contactor	Blank = None A = Included	1 = 24 2 = 120 (with CA option)

Standard Taskmaster Models & Series Notes

MFG CATALOG NUMBER	MFG MODEL NUMBER	KW	BTUs / H	VOLTS	PH	AMPS	CONTROL VOLTAGE	TEMP RISE	AIR THROW	CFM	RECOMMENDED MOUNTING HT.		WT. (LBS)
											Horizontal	Vertical	
06450802	F1F5103N	3.3	11.2	208	1	15.9 / 9.17	208	26°F	12’	400	9’	9’	25
06451002	HF1B5103N	3.3/2.5	11.2 / 8.5	240/208	1	13.7 / 12.0	240 / 208						
06456802	F2F5103N	3.3	11.2	208	1 / 3	15.9 / 9.17	208						
06457002	HF2B5103N	3.3/2.5	11.2 / 8.5	240/208	1 / 3	13.7 / 11.9	240 / 208						
					3	7.9 / 6.9							
06457202	G1G5103N	3.3	11.2	277	1	11.9	277						
06451202	P3P5103CA1N*			480	3	4.0	24						
06455402	F1F5105N	5.0	17.1	208	1	24.1	208	40°F	12’	400	9’	9’	25
06455602	HF1B5105N	5.0/3.7	17.1 / 12.8	240/208	1	20.9 / 18.1	240 / 208						
06451402	F2F5105N	5.0	17.1	208	1 / 3	24.1	208						
					3	13.9							
06451602	HF2B5105N	5.0	17.1	240	1 / 3	20.8 / 18.1	240						27
		3.7	12.8	208	1 / 3	17.1 / 10.4	208						
06458402	G1G5105N	5.0	17.1	277	1	18.1	277						
06451802	P3P5105CA1N*	5.0	17.1	480	3	6.1	24						
06452002	F2F5107CA1L*	7.5	25.6	208	1 / 3	36.1 / 20.8	24	34°F	22’	700	10’	12’	54
06452202	HF2B5107CA1L*	7.5	25.6	240	1 / 3	27.1 / 16.04							
		5.6	19.2	208	1 / 3	31.3 / 27.1							
06459202	G1G5107CA1L*	7.5	25.6	277	1	27.1							
06452402	P3P5107CA1N*	7.5	25.6	480	3	9.1							
06452602	F2F5110CA1L*	9.9	33.8	208	1 / 3	47.8 / 27.4		45°F	22’	700	10’	14’	55
06452802	HF2B5110CA1L*	10.0	34.1	240	1 / 3	41.2 / 24.0							
		7.5	25.6	208	1 / 3	36.1 / 20.8							
06456402	G1G5110CA1N*	10.0	34.1	277	1	36.1							
06453002	P3P5110CA1N*	10.0	34.1	480	3	12.4							
06453202	F3F5115CA1L*	15.0	51.2	208	3	41.7		43°F	32’	1100	11’	20’	64
06453402	HF3B5115CA1L*	15.0/11.2	51.2 / 38.4	240/208	3	36.1 / 31.3							
06453602	P3P5115CA1N*	15.0	51.2	480	3	18.1							
06453802	HF3B5120CA1L*	19.7/14.8	67.2 / 50.5	240/208	3	47.8 / 41.1		57°F	32’	1100	12’	18’	65
06454002	P3P5120CA1N*	20.0	68.3	480	3	24.1							
06458802	F3F5125CA1L*	25.0	85.3	208	3	69.5				2000/1800			
06459802	P3P5125CA1N*	25.0	85.3	480	3	30.1							
06454202	F3F5130CA1L*	30.0	102.4	208	3	83.4		47/53°F	40’	2000/1800	12’	20’	120
06454402	HF3B5130CA1L*	30.0/22.5	102.4 / 76.8	240/208	3	72.3 / 62.5							
06454602	P3P5130CA1N*	30.0	102.4	480	3	36.2							
06440402	F3F5140CA1L*	40.0	136.5	208	3	111.2		40/45°F	55’	3100/2800	15’	24’	120
06440602	HF3B5140CA1L*	40.0/30.0	136.5/102.4	240/208	3	96.4 / 83.4							
06440802	P3P5140CA1N*	39.0	133.1	480	3	47.0							
06454802	F3F5150CA1L*	49.6	169.3	208	3	139.0		51/56°F	50’	3100/2800	15’	22’	120
06455002	HF3B5150CA1L*	50.0/37.5	170.6/128.0	240/208	3	120.5/104.3							
06455202	P3P5150CA1N	50.0	170.6	480	3	60.3							

*Optional wall mounted energy saving SDHW1001 Thermostat recommended

International Models

MFG CATALOG NUMBER	MFG MODEL NUMBER	KW	BTUs / H	VOLTS	PH	AMPS	CONTROL VOLTAGE	TEMP RISE	AIR THROW	CFM	RECOMMENDED MOUNTING HT.		WT. (LBS)
											Horizontal	Vertical	
07153002	Q3H5103CA1	3.3	11263	380	3	5.02	24	26	12’	400	9’	9’	25
07249202	R3H5103CA1			415		4.6							
07249302	Q3H5105CA1	5.0	17065	380		7.6		40					27
04249402	R3H5105CA1			415		6.96							
07171302	Q3H5107CA1	7.5	25600	380		11.4		34	22’	700	10’	12’	54
07249502	R3H5107CA1			415		10.5							
06865702	Q3H5110CA1	10.0	34130	380		15.2		45			10’	14’	55
07249602	R3H5110CA1			415		13.9							

• For 24V control add “CA1” suffix. • For 120V control add “CA2” suffix. • For other voltages consult factory.

NOTES:
- 25-50KW models are wired for single or two stage heating and have two speed motors.
- Air delivery and motor data on dual voltage units reflect higher voltage.
- 600V models available 5-48.5 KW. Use “U” prefix to designate 600v and use 480v pricing.
- Supply wire on 40 and 50 KW models should have rated insulation of 75°C minimum.
- Use T5122 for two stage control.
- Use SDHW1001 for two stage control.
- Use TFS5102 for two stage control.
- Wall thermostat must be used when built-in stratification thermostat is required.

⚠ **WARNING:** This product can expose you to chemicals including nickel which is known to the State of California to cause cancer, and chromium, which is known to the State of California to cause birth defects and/or reproductive harm. For more information go to www.P65Warnings.ca.gov.

Recommended Control Options, Control Accessory Options, & Control Accessories

MFG MODEL NUMBER	DISCONNECT SWITCH		THERMOSTAT		SUMMER FAN SWITCH		THERMOSTAT & SUMMER FAN SWITCH WALL MOUNTED	STRATIFICATION THERMOSTAT	
	1 Ø	3 Ø	IN-BUILT	WALL MOUNTED	IN-BUILT	WALL MOUNTED		IN-BUILT	WALL MOUNTED
F1F5103N	DCS 202	NA	T5100	ET9STS	FS5101	FSW5111	NA	TC5103	TC1602
HF1B5103N									
F2F5103N									
	NA	DCS 403	T5102	TW 1512					
HF2B5103N	DCS 202	NA	T5100	ET9STS					
	NA	DCS 403	T5102	TW 1512					
G1G5103N	DCS 202	NA	T5100	ET9STS				NA	
P3P5103CA1N	NA	DCS 403		RK120EAA	FS5102	FSW5112	TFS5101	TC5102	NA
F1F5105N	DCS 403	NA		S2025	FS5101	FSW5111	NA	TC5103	TC1602
HF1B5105N				ET9STS					
F2F5105N				S2025					
	NA	DCS 403	T5102	TW 1512					
HF2B5105N	DCS 403	NA	T5100	ET9STS					
	NA	DCS 403	T5102	TW 1512					
G1G5105N	DCS 403	NA	T5100	S2025				NA	
P3P5105CA1N	NA	DCS 403		RK120EAA	FS5102	FSW5112	TFS5101	TC5102	NA
F2F5107CA1L	DCS 603	NA			FS5101	FSW5111		TC5103	TC1602
	NA	DCS 603							
HF2B5107CA1L	DCS 403	NA							
	NA	DCS 403							
G1G5107CA1L	DCS 403	NA						NA	
P3P5107CA1L	NA	DCS 403			FS5102	FSW5112		TC5102	NA
F2F5110CA1L	DCS 603	NA			FS5101	FSW5111		TC5103	TC1602
	NA	DCS 603							
HF2B5110CA1L	DCS 603	NA							
	NA	DCS 603							
G1G5110CA1N	DCS 603	NA						NA	
P3P5110CA1N	NA	DCS 403			FS5102	FSW5112		TC5103	NA
F3F5115CA1L		DCS 603			FS5101	FSW5111			TC1602
HF3B5115CA1L		DCS 603							
P3P5115CA1L		DCS 403			FS5102	FSW5112			NA
HF3B5120CA1L		DCS 603			FS5101	FSW5111			TC1602
P3P5120CA1N		DCS 403			FS5102	FSW5112			NA
F3F5125CA1L		DCS 1003	T5100	SDHW1001	FS5101	FSW5111	TFS5101		TC1602
HF3B5125CA1L									
P3P5125CA1N		DCS 403			FS5102	FSW5112			NA
F3F5130CA1L		NA			FS5101	FSW5111			TC1602
HF3B5130CA1L		DCS 1003							
P3P5130CA1N		DCS 603			FS5102	FSW5112			NA
F3F5140CA1L		NA			FS5101	FSW5111			TC1602
HF3B5140CA1L		NA							
P3P5140CA1N		DCS 603			FS5102	FSW5112			NA
F3F5150CA1L		NA			FS5101	FSW5111			TC1602
HF3B5150CA1L									
P3P5150CA1N		DCS 1003			FS5102	FSW5112			NA

CONTROL ACCESSORY OPTIONS - FIELD INSTALLED IN HEATER		
MFG CATALOG NUMBER	MFG MODEL NUMBER	DESCRIPTION
POWER DISCONNECT SWITCH*		
07171502	DCS202 / 5100	20 AMP; 0-16 Amps
07171602	DCS403 / 5100	40 AMP; 16.1-32 Amps
07171702	DCS603 / 5100	60 AMP; 32.1-48 Amps
07171802	DCS1003 /5100	100 AMP; 48.1-80 Amps
*Disconnect must be rated at 80% of total ampload.		
LINE VOLTAGE THERMOSTAT		
06927702	T5100	SPST; PILOT DUTY 25 AMP, 24-277V , (40-110 °F)
06927802	T5102	DPST; LINE DUTY 25 AMP 120-277V 25 AMP, 120-277V , (40-120 °F)
LOW VOLTAGE THERMOSTAT (ALL CA1 MODELS)		
06927702	T5100	SPST; LOW VOLT/PILOT DUTY; 125VA; (3.3-20 KW UNITS) , (40-110 °F)
06927902	T5122	2-STAGE; LOW VOLT; 125VA; (25-50 KW UNITS) , (40-100 °F)
STRATIFICATION THERMOSTAT		
06928002	TC5102	SPST; LOW VOLT/PILOT DUTY (W/RELAY) ; 70-130°
06928102	TC5103	SPST; LINE DUTY; AMP 120-240V; 70-130°
SUMMER FAN SWITCH		
06928202	FS5101	SPST; LINE VOLT ;120-277V
06928302	FS5102	SPST; LINE VOLT ; 480-600V

CONTROL ACCESSORIES - REMOTE WALL MOUNTED		
MFG CATALOG NUMBER	MFG MODEL NUMBER	DESCRIPTION
LINE VOLTAGE THERMOSTAT		
05029102	S2025H10AA**	SP; 25 Amp; 120-277VI; 50-90°F
05238902	ET9STS**	SP; 22 Amp; 120-277V; 50-90°F
06910902	TW1512*	DPST; 25 AMP; 120-277V; 50-90°F
LOW VOLTAGE THERMOSTATS (ALL CA1 MODELS)		
05260102	RK120EAA	24VAC or MV; 50°-90°F
05236402	SDHW1001***	MULTI-STAGE; 50-90°F
STRATIFCATION THERMOSTAT		
06911002	TC1602	SPST; LINE VOLT; 120-277V; 70-140°
SUMMER FAN SWITCH		
06926202	FSW5111	SPST; LINE VOLT; 120-277V
06926302	FSW5112	SPST; LOW VOLT; (W/RELAY)
LOW VOLTAGE THERMOSTAT & SUMMER FAN SWITCH(W/RELAY) (CA1 MODELS)		
06926402	TFS5101	SPST; LOW VOLT; 50-90°
06926502	TFS5102	ELECTRONIC; 1 OR 2 STAGE; LOW VOLT; 40° - 90°F

*Use DPST double line break thermostat for 3-phase line voltage control in non "C" models.
**Any SPST thermostat of sufficient amperage may be substituted.
*** For complete specifications, refer to page 108.

5100 Series Horizontal or Vertical Mounted Fan Forced Unit Heater

Available With Setback On Demand (SD) Thermostat Factory Installed

5100 SD Features

- 24-Volt Control
- Factory pre-programmed - just set your setback temperature in the field
- Setback feature allows up to 12 degree setback with easy-to-use adjustable slide switch
- Occupancy sensor defaults to economy mode after one hour, sensor has 94 degree angular range and a 16' linear range
- Temperature range of 50-90 degrees
- Up to two stage operation on 5103-5150 Series and up to four stages on 5160-51100 Series
- 65-second delay between stages
- Add "SD" as suffix to heater model number for factory built in option

Intertek

⚠ **WARNING:** This product can expose you to chemicals including nickel which is known to the State of California to cause cancer, and chromium, which is known to the State of California to cause birth defects and/or reproductive harm. For more information go to www.P65Warnings.ca.gov.

5100 Series 60 KW - 100 KW Suspended Fan Forced Unit Heater

⚠ **WARNING:** This product can expose you to chemicals including nickel which is known to the State of California to cause cancer, and chromium, which is known to the State of California to cause birth defects and/or reproductive harm. For more information go to www.P65Warnings.ca.gov.

Intertek

Mounting Brackets and Accessories

Mounting Brackets			
MFG CATALOG NUMBER	MFG MODEL NUMBER	KW	DESCRIPTION
07220002	A5175	60 To 70	Wall/Ceiling Bracket
07220102	A51100	80 to 100	
07220302	B5175	60 to 70	Heater Bracket
07220402	B51100	80 to 100	
07220202	V51100	60 to 100	Vertical Bracket
07220502	DS5175	60 to 70	Dust Shield
07220602	DS51100	80 to 100	
07220902	OFG 5175	60 to 70	Fan Guard
07221002	OFG 51100	80 to 100	

Dimensions (Inches)				WT. (LBS)
KW	H	W	D	
60-70	35 ½	30 ½	14 ½	141
80-100	39 ½	37 ⅝	18 ½	202

Features & Specifications

CONSTRUCTION:
Heavy gauge steel cabinet with powder coated finish and control compartment housing a master terminal board. The control compartment allows for access through a hinged and latched door, simplifying wiring, installation, and maintenance. Made in U.S.A

HEATING ELEMENT:
The heating element is a copper clad steel sheath element with continuously brazed steel fins formed to allow side draw through air flow.

OVERHEAT PROTECTION:
All units come equipped with manual reset type limit controls to de-energize the heater should an over-temperature situation occur.

FAN & MOTOR:
Single speed, single phase permanently lubricated, thermally protected motors with ball bearings. The fan override purges the unit of residual heat at shutdown.

FIELD INSTALLED OPTIONS:
Summer fan switch to operate the fan only, and a heat stratification thermostat for high bay areas.

HEATER STAGING:
60 KW and 70 KW are three stage; 80 KW, 90 KW, & 100 KW are four stage.

SC5100 FACTORY INSTALLED ELECTRONIC STEP CONTROLLER:
The optional factory installed step controller is a first on last off sequencer that will cycle the unit heater stages through an optional wall thermostat. Additionally, the step controller can be controlled by any building management system with 4 to 20 MA or 0 - 10 VDC field supplied control signal.

Optional Factory Installed Electronic Step Controller

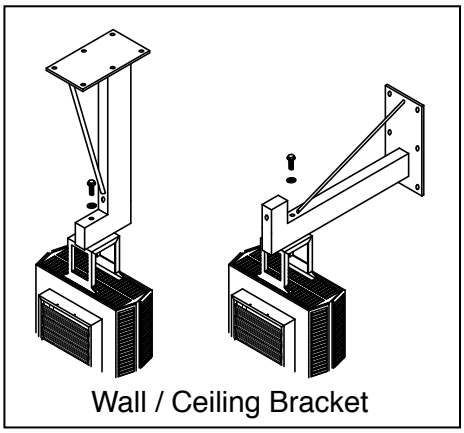

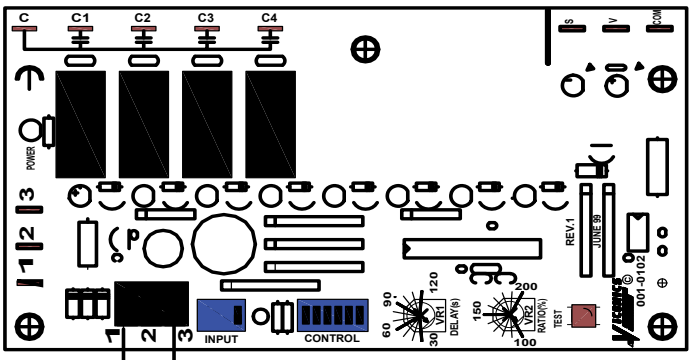

3 OR 4 STAGE STEP CONTROL

0-10VDC-CONTROL OR VT7225 THERMOSTAT

Electrical Data

MFG CATALOG NUMBER	MFG MODEL NUMBER	KW	BTUs / HR (x 1000)	VOLTS	PHASE	CONTROL VOLTAGE	AMPS / PHASE	BRANCH CIRCUIT PROTECTION SIZE
07213402	F3F5160CA1	60	204.7	208	3	24	166.7	225
07213502	HF3B5160CA1	60/45	204.7/153.6	240/208			144.6/125	200/175
07213602	P3P5160CA1	60	204.7	480			72.3	100
07214202	F3F5170CA1	70	238.9	208	3	24	194.4	250
07214302	HF3B5170CA1	70/52.5	238.9/179.2	240/208			168.7/145.8	225/200
07214402	P3P5170CA1	70	238.9	480			84.3	110
07217002	HF3B5180CA1	80/60	273/204.7	240/208	3	24	192.8/166.7	250/225
07217102	P3P5180CA1	80	273	480			96.3	125
07217602	HF3B5190CA1	90/67.5	307.1/230.4	240/208	3	24	216.9/187.5	300/250
07217702	P3P5190CA1	90	307.1	480			108.4	150
07218202	HF3B51100CA1	100/75	341.3/256	240/208	3	24	241/208.3	350/300
07218302	P3P51100CA1	100	341.3	480			120.4	175

Air Delivery Data

MFG CATALOG NUMBER	MFG MODEL NUMBER	CFM at OUTLET	FPM at OUTLET	TEMP RISE °F	HP	MOTOR RPM	AIR THROW	MAX MOUNTING	
								Horizontal	Vertical
07213402	F3F5160CA1	3400	1485	60	1/3	1100	50’	18’	31’
07213502	HF3B5160CA1			60/45					
07213602	P3P5160CA1			60					
07214202	F3F5170CA1			70					
07214302	HF3B5170CA1			70/53					
07214402	P3P5170CA1			70					
07217002	HF3B5180CA1	5000	1529	55/41	3/4	1100	65’	22’	40’
07217102	P3P5180CA1			55					
07217602	HF3B5190CA1			61/46					
07217702	P3P5190CA1			61					
07218202	HF3B51100CA1			68/51					
07218302	P3P51100CA1			68					

Recommended Control Options

MFG CATALOG NUMBER	MFG MODEL NUMBER	STEP CONTROLLER	REMOTE THERMOSTAT	SUMMER FAN SWITCH		STRATIFICATION THERMOSTAT	
				Wall	Built-In	Wall	Built-In
		CATALOG/ MODEL	CATALOG/ MODEL	CATALOG/ MODEL	MODEL	CATALOG/ MODEL	CATALOG/ MODEL
07213402	F3F5160CA1	05232302 SC5100	44046001 VT7225 (0-10VDC)	06926302 FSW5112	FS5101	06926402 TFS5101	06928002 TC5102
07213502	HF3B5160CA1				FS5101		
07213602	P3P5160CA1				FS5102		
07214202	F3F5170CA1				FS5101		
07214302	HF3B5170CA1				FS5101		
07214402	P3P5170CA1				FS5102		
07217002	HF3B5180CA1				FS5101		
07217102	P3P5180CA1				FS5102		
07217602	HF3B5190CA1				FS5101		
07217702	P3P5190CA1				FS5102		
07218202	HF3B51100CA1				FS5101		
07218302	P3P51100CA1				FS5102		

General Description & Diffuser Information

CONSTRUCTION:
- 16 gauge steel cabinet with epoxy powder coated finish and control compartment with a hinged and latched access door.
- OSHA guards standard with all models.
- Made in U.S.A

HEATING ELEMENT:
- Corrosion resistant element with steel sheath and steel spiral fins.

OVERHEAT PROTECTION:
- All units come equipped with manual reset limit controls to de-energize the heater should an over-temperature situation occur.

FAN and MOTOR:
- Totally enclosed, 1 speed, 1 phase permanently lubricated, thermally protected motors with unit bearings on 3KW - 20KW models. Totally enclosed, 2 speed, 1 phase permanently lubricated, thermally protected motors with sleeve bearings on 24KW - 50KW models.
- Axial flow fan blade - 1570 RPM max.
- All models equipped with fan purge which allows fan to operate after elements are de-energized to purge residual heat.

TEMPERATURE CONTROLS:
- 208V, 240V, 277V and 480V units have In-Built 24 Volt transformer for low voltage remote thermostat application.
- 600V units have In-Built 240V control on 5-20 KW models, 25-50 KW models have 24V control.
- 25 KW - 50 KW models may operate as 2 stage heaters if 2 stage remote thermostat is used.

DISCONNECT SWITCH:
- All models equipped with In-Built disconnect except F3F2640, F3F2630CA1, F3F2650, H3H2650, and H3H2640CA1.

INSTALLATION:
- Unit can be mounted using optional mounting bracket or field constructed angle iron bracket.
- Not recommended for mounting with threaded rod or chain.

2600 Series shown with standard wire guard. Diffusers are field installed.

Intertek

WARNING: This product can expose you to chemicals including nickel which is known to the State of California to cause cancer, and chromium, which is known to the State of California to cause birth defects and/or reproductive harm. For more information go to www.P65Warnings.ca.gov.

Diffuser Descriptions

Standard Heater

Dimensions**		
KW	B	A
5-20	20 ½"	15"
25-50	27"	21 ½"

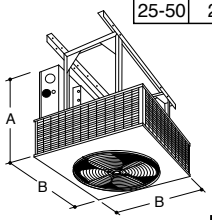

For general distribution. Choice of other diffusers may be added after installation if required.

O.S.H.A guard for fan blade D1604 for 2605-2620, & D1614 for 2625-2650 Do not use with other diffusers.

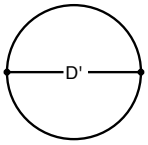

Radial Louvered Cone Diffuser

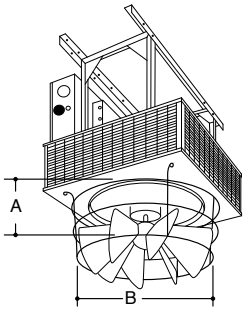

MODEL	KW	DIM: A	DIM: B
D1600	5-20	6 ½"	14 ¼"
D1610	25-50	11 ½"	24 ¾"

With vanes vertical, straightens air for higher mounting. Closed position for broad horizontal coverage. Adjustable for intermediate requirements.

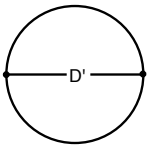

Linear Louvered Diffuser

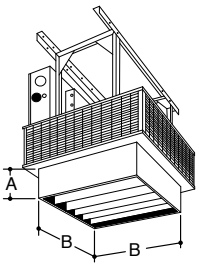

MODEL	KW	DIM: A	DIM: B
D1602	5-20	6"	16 ¼"
D1612	25-50	6"	22 ¼"

Affords more precise directional throw where heaters cannot be mounted directly over area to be heated or for heating long narrow areas.

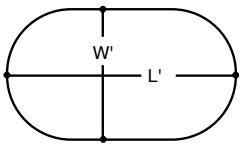

Anemostat Diffuser

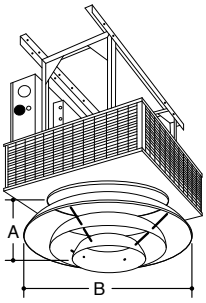

MODEL	KW	DIM: A	DIM: B
D1603	5-20	7"	19 ¼"
D1613	25-50	9 ¾"	29 ¾"

Blends room air with heated air for widespread distribution without excessive drafts.

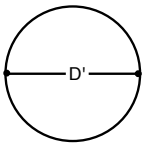

MODEL	MAX MOUNTING HEIGHT*	D (ft.)	VERTICAL MAX MOUNTING HEIGHT	VERTICAL D (ft.)	45 DEGREES OPEN MAX MOUNTING HEIGHT	45 DEGREES OPEN D (ft.)	MAX MOUNTING HEIGHT	W (ft.)	L (ft.)	MAX MOUNTING HEIGHT	D (ft.)
2605	10	25	15	25	8	30	10	10	40	9	25
2607	10	25	15	25	8	30	10	10	40	9	25
2610	22	40	26	36	15	44	22	14	54	20	38
2615	20	44	24	38	14	46	20	14	60	18	40
2620	18	48	22	40	13	50	18	15	66	16	42
2625	32	48	38	42	24	70	34	30	80	30	60
2630	30	60	36	50	22	74	32	34	80	28	64
2640	26	64	32	50	20	78	30	36	90	26	67
2650	24	68	28	50	18	82	28	40	100	24	70

*Minimum mounting height 6 feet.
**Dimensions are for all heater models without a diffuser option. Adding a diffuser will change the vertical ("A") dimension of heater.
All mounting distances are in feet. All diagrams show optional mounting bracket.

Product Specifications

SPECIFICATIONS: The contractor shall furnish and install the 2600 Series electric vertical discharge unit heaters of the size, capacity and voltage specified. Heaters shall be installed according to the manufacturer's recommendations and applicable national and local codes.

ELEMENTS: Elements shall consist of Nickel Chromium alloy resistance wire embedded and completely surrounded in Magnesium Oxide, enclosed and swagged into corrosion resistant sheaths. Corrosion resistant steel fins shall be permanently attached to the sheaths to provide maximum heat transfer to the air stream.

MOTORS: Motors shall be single phase, resilient mounted, totally enclosed, industrial rated with an automatic reset thermal overload protective device. Motors on heaters up to 20 KW capacity shall be permanently lubricated shaded pole type. Over 20 KW, motors shall be permanent split capacitor type. Motors shall be mounted out of the main air stream in such a manner as to allow ambient air to be drawn over the motor to reduce motor temperature. Motor shall be separately removable from beneath the heater without removing the entire heater from mounting bracket.

FAN BLADES: Fan blades shall be heavy-duty individually balanced axial flow type. Fan speed shall not exceed 1570 RPM.

THERMAL OVERLOAD PROTECTION: All heaters shall be equipped with a manual reset thermal cutout which disconnects elements and motor in the event normal operating temperatures are exceeded.

WIRING: Heaters shall be designed for a single supply circuit with elements, motor and control circuits subdivided and fused to conform with the latest National Electric Code and OSHA requirements. All three phase heaters shall have balanced phases.

CONTROLS: Heaters shall be controlled by a low voltage wall mounted thermostat. All heaters 25 KW and larger shall be wired for 2 stage operation. 5 KW through 20 KW units are single stage. All heaters shall be equipped with a fan safety device that causes fan to operate after elements are de-energized to purge unit of residual heat.

Standard Models

MFG CATALOG NUMBER	MFG MODEL NUMBER	KW	BTUs	VOLTS	PH	AMPS	CONTROL VOLTS	TEMP RISE °F	CFM	WT (LBS)
07157502	F1F2605CA1	5	17065	208	1	24.03	24	34	490	75
07157602	H1H2605CA1			240		20.83				
07157702	G1G2605CA1			277		18.05				
07157802	F3F2605CA1			208	3	13.89				
07157902	H3H2605CA1			240		12.04				
07158002	P3P2605CA1			480		6.02				
07158202	F1F2607CA1	7.5	25598	208	1	36.05	24	45	560	75
07158302	H1H2607CA1			240		31.25				
07158402	G1G2607CA1			277		27.07				
07158502	F3F2607CA1			208	3	20.84				
07158602	H3H2607CA1			240		18.06				
07158702	P3P2607CA1			480		9.03				
07158902	F1F2610CA1	10	34130	208	1	48.07	24	26	1200	75
07159002	H1H2610CA1			240		41.66				
07159102	G1G2610CA1			277		36.1				
07159202	F3F2610CA1			208	3	27.79				
07159302	H3H2610CA1			240		24.08				
07159402	P3P2610CA1			480		12.04				
07159602	F3F2615CA1	15	51195	208		41.68	24	39	1200	75
07159702	H3H2615CA1			240		36.12				
07159802	P3P2615CA1			480		18.06				
07160002	H3H2620CA1	19.4	68260	240		48.16	24	52	1200	75
07160102	P3P2620CA1	20		480		24.08				
07175102	F3F2625CA1	25	85325	208		69.48	24	24	3300	175
07175202	H3H2625CA1			240		60.21				
07175302	P3P2625CA1			480		30.1				
07175502	F3F2630CA1*	30	102390	208		83.37		29	3300	175
07175602	H3H2630CA1			240		72.25				
07175702	P3P2630CA1			480		36.12				
07175902	F3F2640CA1*	40	136520	208		111.17		38	3300	175
07176002	H3H2640CA1*			240		96.33				
07176102	P3P2640CA1			480		48.16				
07176302	F3F2650CA1*	50	170650	208		138.96		48	3300	175
07176402	H3H2650CA1*			240		120.42				
07176502	P3P2650CA1			480		60.21				

*Disconnect not available

Field Installed Accessories

MFG CATALOG NUMBER	MFG MODEL NUMBER	DESCRIPTION
06926302	FSW5112	Summer Fan Switch
06911002	TC1602	Wall Mounted Stratification Thermostat Range - (70 °F - 140 °F)
07177502	A1600	Ceiling Mount Bracket 5-20 KW Models
07177602	A1601	Ceiling Mount Bracket 25-50 KW Models

MFG CATALOG NUMBER	MFG MODEL NUMBER	DESCRIPTION
07177902	D1602	Linear Louvered Diffuser 5-20 KW Models
07178002	D1612	Linear Louvered Diffuser 25-50 KW Models
07178102	D1600	Radial Louvered Cone Diffuser 5-20 KW Models
07178202	D1610	Radial Louvered Cone Diffuser 25-50 KW Models
07178302	D1603	Anemostat Diffuser 5-20 KW Models
07178402	D1613	Anemostat Diffuser 25-50 KW Models

5700 Series Confined Space Plenum Rated Heater

⚠ **WARNING:** This product can expose you to chemicals including nickel which is known to the State of California to cause cancer, and chromium, which is known to the State of California to cause birth defects and/or reproductive harm. For more information go to www.P65Warnings.ca.gov.

Intertek

Features

- Easily fits between joists for typical installation
- Zero clearance for wall and ceiling mounting as well as floor mounting with appropriate inlet and outlet clearances
- Bracket standard or can be mounted by ⅜" threaded rod (field supplied)
- Automatic reset thermal limit for safety
- 1 Phase model wattage field changeable from 1874 to 5000 Watts
- 24V control circuit on three phase models with hydraulic thermostat
- Made in U.S.A

Conforms to ANSI/UL 1995
Certified to CAN/CSA C 22.2 No.236-11

Product Dimensions

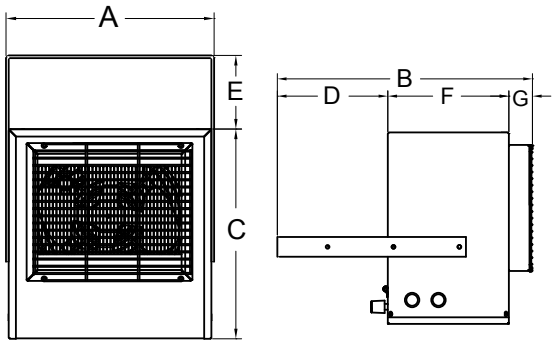

A	B	C	D	E	F	G
14.4"	19.4"	14.5"	8.4"	5.1"	9.2"	1.8"

Standard Models

MFG CATALOG NUMBER	MFG MODEL NUMBER	WATTS	BTUs	VOLTS	PHASE	AMPS	TEMP RISE	TEMP RANGE	AIR THROW	CFM	WT. (LBS)
07262402	HF5705T	5000	17065	240	1	21	57 °F	(40 °F-120 °F)	16'	275	32
		4165	14215			17	48 °F				
		3332	11365			14	38 °F				
		2500	8533			10	29 °F				
		3750	12798	208	1	18	43 °F	(40 °F-120 °F)			
		3123	10659			15	36 °F				
		2500	8553			12	29 °F				
		1874	6396			9	21 °F				
07262502	H3H5705T	3750	12799	208	3	10.4	43 °F	(40 °F-110 °F)			
		5000	17065	240	3	12	57 °F				
07262602	P3P5705T	5000	17065	480	3	6	57 °F	(40 °F-110 °F)			
07073602	DCS-MT303	Optional Field Installed Disconnect Switch, 30 Amp @ 600Volts									

Product Specifications

CASING & CONSTRUCTION: Fabricated of die formed, heavy gauge steel and finished with two tone, brown and beige, durable powder coated paint. Supply air is drawn through the rear heavy duty expanded steel inlet grill. Heated air is discharged through front adjustable louvers, which are spring loaded for individual adjustment. Made in U.S.A.

ELEMENT: Heavy-duty block fin element design. The multiple tap electric connection design allows field conversion to eight wattage settings at 208/240-Volt single phase or 240/480 Volt, 3 phase. Units are available on special order with a specific wattage/ voltage setting.

MOTOR: Motor shall be totally enclosed, permanently lubricated, all angle industrial rated with thermal overload protection.

WIRING: Wiring to terminal block adjacent to incoming knockout in accordance with NEC and local codes.

THERMAL OVERLOAD: All heaters shall be equipped with an automatic reset thermal cutout to shut down the element and motor circuits if unsafe operating temperatures are exceeded.

CONTROLS: The heater shall have a heavy-duty hydraulic thermostat (with a temperature range of 40 °F-110 °F)factory installed and wired. All controls and wiring shall be in a large wiring compartment with hinged door for easy access. An optional disconnect switch shall be available for field installation.

MOUNTING: Heaters are standard with a three position-mounting bracket for wall, ceiling or workbench. Heaters can be mounted for horizontal or vertical discharge. Note: Minimum mounting height is 6 feet, and minimum distance from side of heater to nearest wall is 6 inches. Note: Approved for residential applications.

Front view

Intertek

⚠ **WARNING:** This product can expose you to chemicals including nickel which is known to the State of California to cause cancer, and chromium, which is known to the State of California to cause birth defects and/or reproductive harm. For more information go to www.P65Warnings.ca.gov.

Product Dimensions

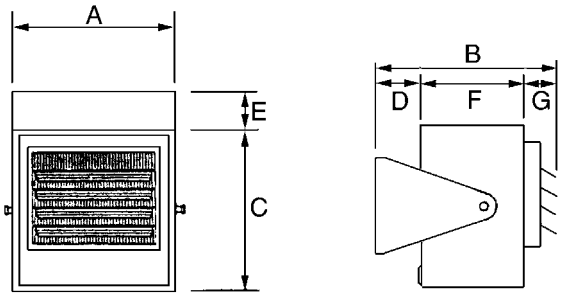

A	B	C	D	E	F	G
14”	12 11/16”	14”	1 9/16”	1 9/16”	9”	2 3/4”

Standard Models

MFG CATALOG NUMBER	MFG MODEL NUMBER	WATTS	BTUs	VOLTS	PHASE	AMPS	TEMP RISE	AIR THROW	CFM	WT. (LBS)
07072802	HF5605T	5000	17065	240	1	21	57 °F	16'	275	32
		4165	14215			17	48 °F			
		3332	11365			14	38 °F			
		2500	8533			10	29 °F			
		3750	12798	208	1	18	43 °F			
		3123	10659			15	36 °F			
		2500	8553			12	29 °F			
		1874	6396			9	21 °F			
07072902	H3H5605T	3750	12799	208	3	10.4	43 °F			
		5000	17065	240	3	12	57 °F			
07073002	P3P5605T	5000	17065	480	3	6	57 °F			
07073602	DCS-MT303	Optional Field Installed Disconnect Switch, 30 Amp @ 600Volts								
For 24V control on single phase models delete "T" suffix										

Product Specifications

⚠ **WARNING:** This product can expose you to chemicals including nickel which is known to the State of California to cause cancer, and chromium, which is known to the State of California to cause birth defects and/or reproductive harm. For more information go to www.P65Warnings.ca.gov.

Intertek

The electric cabinet unit heater is designed for mounting in any position, fully recessed, semi-recessed or surface mounted. All capacities, voltages, physical sizes, grille arrangements and options shall be as specified on the plans. All units must be field convertible to the following:

1. For control by a field supplied remote thermostat.
2. Load management control with an external dry switch. When closed unit operates under control of either the internal or the external thermostat. When open, unit turns off.
3. Any grille arrangement.

CABINET & CONSTRUCTION: The cabinet shall be constructed of heavy duty 16 gauge Zinc coated steel. The heater shall have a removable front door for easy access to the control panel, elements, motor-blower assembly, filters and all internal components. The grill configuration must be easily field convertible to any air flow configuration (by removal of no more than four fasteners). The cabinet shall have a textured finish of two coats of powder coat epoxy and be suitable for use with optional kick space base. Made in U.S.A.

HEATING ELEMENTS: The heating elements shall be warranted for 1 year and shall be non-glowing design consisting of special high temperature resistance wire enclosed in an incoloy sheath to which steel fins are furnace brazed. The heating elements shall be located directly in front of the blower discharge air for uniform heating. They shall be mounted with a single anchor at one end to minimize effects of thermal expansion and contraction.

SAFETY CUTOUT: Thermal safety limits shall be built into the system to automatically shut off heater in event of overheating due to any cause. The safety cutouts shall be of two types:

A. The primary limit shall be an automatic capillary type to sense the heat along the full length of the heating elements. It shall de-energize the heaters by opening the coil circuit on the heating contactors.
B. The secondary limit shall be a manual reset thermal device to interrupt power to the heating elements.

MOTOR AND BLOWER ASSEMBLY: The motors and blowers shall be direct drive and resiliently mounted on rigid heavy gauge frame for quiet operation and long life. The motor shall be two-speed, shaded pole type, rated for the voltage (480 to 600 Volts are single speed only). Each shall have built-in automatic reset overload protection and are life time lubricated. The motor shall be vented and mounted in the air stream to provide maximum cooling of the motor.

HIGH AND LOW HEAT RANGES: All units will be supplied as standard with a switch for selecting full heat at high fan speed or reduced heat at low fan speed (On 480 & 600 Volt units the switch changes the heat but not the fan speed).

OVER CURRENT PROTECTION: Circuit breakers shall be provided for branch circuit protection where required by NEC. Circuit breakers are optional on all other heaters.

TEMPERATURE CONTROL: Integral factory installed thermostat shall be tamper resistant, linear capillary type. Optional setback thermostat available.

Mounting Configurations

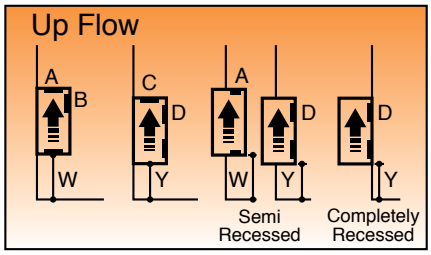

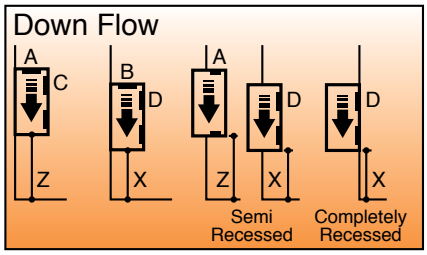

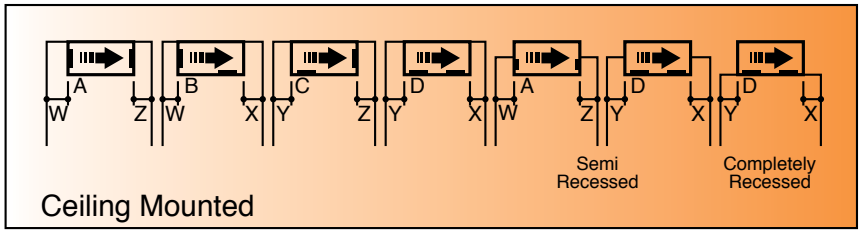

KEY: **W** = 6” minimum, **X** = 12” minimum, **Y** = 0” or greater, **Z** = 24” minimum

NOTE: Semi-recessed units are to be recessed at a maximum of 3 ½” unless grill configuration is front in and front out.

MOUNTING CLEARANCES: Proper clearances are indicated for each mounting configuration on all positions. Minimum clearance from side of unit to the wall is zero inches. Mounting inches are provided in the back of the cabinet, accessible through the blower compartment, if necessary, remove blower deck if additional mounting screws or bolts are desired. Blower deck may be slipped forward by loosening four screws at the front to provide access to mounting holes.

6300 Series Multiple Angle Cabinet Unit Heater

Product Features (2-24 KW; All Voltages)

- For commercial and institutional application such as stores, schools, offices, transportation terminals, churches, or entranceways
- Wall or ceiling mount; surface, semi-recessed or fully recessed
- (8) air inlet and outlet configurations
- Capacities from 2-24 KW with 230 to 1,000 CFM
- Motors are two speed, shaded pole, resilient mounted, direct drive. High/low heat and blower speed offer versatility
- ETL Listed
- Beige powder coated finish
- Choice of five standard control options include unit mounted 120 or 24V thermostats, with built-in control transformers, setback thermostat option
- Industrial type finned tubular elements
- Easily removable fan and element decks for simplified maintenance
- Full length thermal protection
- Limited warranty-one year
- Optional locking front cover

Product Dimensions

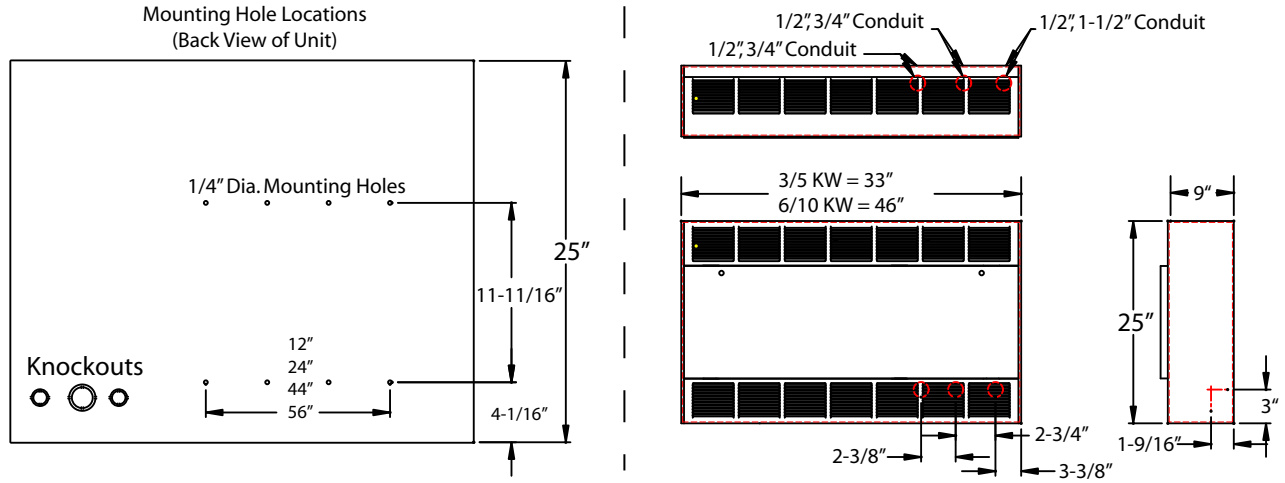

Stocked Models & Features

HEATER LENGTH	MFG CATALOG NUMBER	MFG MODEL NUMBER	HIGH				LOW				VOLTS	PHASE	WT. (LBS)
			KW	BTU's	AMPS	CFM	KW	BTUs	AMPS	CFM			
33"	06671402	6333D052033B30D0F	5	17065	25.0 / 17.6	250	3	10239	15.4 / 9.2	230	208	1-3*	99
	06671502	6333D052433B30D0F			21.8 / 15.4				13.5 / 8.2		240	1-3*	
	06670802	6333D054833B30D0F			7.8				4.6		480	3	
46"	06671902	6346D102433B30D0F	10	34130	43.6 / 30.7	500	6	20478	26.9 / 16.2	460	240	1-3*	130
	06672002	6346D104833B30D0F			15.4				8.1		480	3	
International Models													
33"	04736202	6333D053834B30D0F1	5	17065	7.6	250	3	10239	4.56	230	380	3 (4-Wire)	99
	04736302	6333D054134B30D0F1			6.97				4.18		415		
46"	04736402	6346D103834B30D0F1	10	34130	15.2	500	6	20478	9.12	460	380		130
	04736502	6346D104134B30D0F1			13.94				8.36		415		

*Factory wired for 3-phase, field convertible to 1-phase.

- 1 / 3 phase field convertible with 24 Volt control circuit.
- Disconnect switch, dust filter, & high low operation.
- Built-in thermostat and field convertible for remote thermostat.

Accessories

MFG CATALOG NUMBER	MFG MODEL NUMBER	SIZE	DESCRIPTION
DUCT COLLAR			
04415602	DC-33	33"	The same model is used for the inlet or outlet. If duct collars are required for both inlet & outlet then 2 must be ordered.
04415702	DC-46	46"	
04415802	DC-66	66"	
04415902	DC-79	79"	
RECESSING TRIM FRAMES			
04537802	TF-33	33"	Recessing Trim Frames should be ordered to "trim-out" any recessed or semi-recessed installation.
04537902	TF-46	46"	
04538002	TF-66	66"	
04538102	TF-79	79"	

MFG CATALOG NUMBER	MFG MODEL NUMBER	SIZE
Fresh Air Make-Up Intake Flange & Kickbase		
07715802	FAM33	33"
07715902	FAM46	46"
07716002	FAM66	66"
07716102	FAM79	79"
Kickbase (Pedestal) ONLY		
07715402	KB33	33"
07715502	KB46	46"
07715602	KB66	66"
07715702	KB79	79"

Locking Cover Option

SD Setback Thermostat Option

⚠ **WARNING:** This product can expose you to chemicals including nickel which is known to the State of California to cause cancer, and chromium, which is known to the State of California to cause birth defects and/or reproductive harm. For more information go to www.P65Warnings.ca.gov.

6300 SD Series Features

- Multi-stage operation-only using the heat you need, when you need it
- 65 second delay between stages
- Sensor has a 94 degree angular range and a 16' linear range
- 50-90 degree thermostat range
- Setback capability up to 12 degrees - field set. Achieves energy savings when area not occupied and heat not needed
- Purge cycle of 90 seconds allows residual heat to be exhausted from heater
- Factory pre-programmed for system type/voltage
- Easy steps to set thermostat and setback feature
- Occupancy sensor defaults to economy mode after one hour, up to 12 degree setback
- Sensor has a 94 degree angular range and a 16' linear range

LENGTH	KW		Elements per Heat Deck		CFM		1-PHASE UNITS - AMPS (HIGH)				3-PHASE UNITS - AMPS (HIGH)			
							208V	240V	277V	600V	208V	240V	480V 3-WIRE	600V
	High	Low	Left	Right	High	Low								
33"	2	1	2		250	230	10.6	9.3	8.12	3.8	9.2	8.1	4.1	3.3
	3	2	3				15.4	13.5	11.7	5.5	9.2	8.1	4.1	3.4
	4	2	4				20.2	16.7	15.3	7.2	13.4	11.8	6	6.22
	5	3	5				25	21.8	19	8	17.6	15.4	7.8	5.5
	6	3	6				29.9	26	22.6	10.5	17.6	15.4	7.8	6.3
46"	4	2	2		500	460	21.1	18.6	16	7.46	18.7	16.2	8.1	6.5
	6	4	3				30.8	26.9	23.1	10.79	18.4	16.2	8.1	6.5
	8	4	4				40.4	35.2	30.5	14.12	26.7	23.4	11.7	9.4
	10	6	5				50	43.6	37.7	17.5	35.1	30.7	15.4	12.3
	12	6	6				59.6	51.9	44.9	20.8	35.1	30.7	15.4	12.3
66"	6	3	2	2	750	690	31.8	27.9	24.1	11.3	27.6	24.3	12.3	9.8
	9	6	3	3			46.2	40.4	35	16.3	27.6	24.3	12.3	9.9
	12	6	4	4			60.6	52.9	45.8	21.3	40.1	35.2	17.7	15.6
	15	9	5	5			75	65.4	56.7	25.5	52.6	46.1	23.1	15.7
	18	9	6	6			89.4	77.9	67.5	31.3	52.6	46.1	23.1	18.5
79"	8	4	2	2	1000	920	42.3	37.1	32	14.9	36.7	32.3	16.2	13
	12	8	3	3			61.5	53.8	46.5	21.6	36.7	32.3	16.2	13
	16	8	4	4			80.7	70.5	61	28.2	53.4	46.8	23.5	18.8
	20	12	5	5			NA	87.1	75.4	34.9	70.1	61.4	30.7	24.6
	24	12	6	6			NA	NA	89.8	41.6	70.1	61.4	30.7	24.6

Custom Specified Models

HOW TO DESIGNATE A MODEL:

63	46	D	08	24	1	2	B3	S	D	O	F
Series Number	Cabinet Size 33=33" 46 = 46" 66 = 66" 79 = 79"	Air Flow Configuration A = Bottom in / Top out C = Front in / Top out B = Bottom in / Front out D = Front in / Front out	Element KW 2KW through 24KW See model chart for length and KW options.	Element Voltage 20 = 208V 24 = 240V 27 = 277V 41 = 415V 48 = 480V 57 = 600V	Phase 1 = Single Phase 3 = Three Phase	Number of Wires in Electrical Service 2 or 3	Control Options B3, B4, B5, B6 SD - Setback (see control options chart)	Summer Fan Switch S = Included O = Not Included	Disconnect Option C = Circuit Breaker D = Disconnect Switch O = None	Motor Fusing Option M = Required O = Not Required	Disposable Filter Option F = Required O = Not Required L - Locking Front Cover

Control Option (Step 8 on Model Designator)

SUFFIX	DESCRIPTION
B3	In-Built 1-Stage Stat and Relays which are operated by an internal 24 Volt source. (40 °F-110 °F)
B4*	In-Built 1-Stage Stat and Relays which are operated by an internal 120 Volt source. (40 °F-110 °F)
B5	In-Built 2-Stage Stat & Relays which are operated by an internal 24 Volt source. (40 °F-120 °F)
B6*	In-Built 2-Stage Stat and Relays which are operated by an internal 120 Volt source. (40 °F-120 °F)
SD	Setback Thermostat

*Motor fusing included for units with 120V internal or external control source.

Disconnect Option "C" Circuit Breaker (Step 10 on Model Designator)

KW	SINGLE PHASE				THREE PHASE			
	208V	240V	277V	600V	208V	240V	480V	600V
2	available	available	available	available	available	available	available	available
3								
4								
5								
6								
8								
10	required	required	required		required	required		
12								
15								
16								
18								
20	N/A	N/A						
24								

Circuit breakers shown in shaded areas are required by NEC because unit exceeds 48 Amps, all others listed are optional unless otherwise stated.

Disconnect Option "D" Disconnect Switch (Step 10 on Model Designator)

KW	SINGLE PHASE				THREE PHASE			
	208V	240V	277V	600V	208V	240V	480V	600V
2	available without circuit breaker option "C"	available without circuit breaker option "C"	available without circuit breaker option "C"	available without circuit breaker option "C"	available without circuit breaker option "C"	available without circuit breaker option "C"	available without circuit breaker option "C"	available without circuit breaker option "C"
3								
4								
5								
6								
8								
10	N/A	N/A	N/A		N/A			
12								
15								
16								
18								
20						N/A		
24								

Disconnect option is not available on heaters with circuit breaker.

Fan Switch & Motor Fusing (Steps 9 & 11 on Model Designator)

SUFFIX	DESCRIPTION
S	Summer Fan Switch
M	Motor Fusing (when not provided by control option)

Filter Option (Step 12 on Model Designator)

SUFFIX	SIZE	Qty. REQ'D	FILTER TYPE
F	33"	1	Replaceable
	46"	1	
	66"	2	
	79"	2	
W	33"	1	Washable
	46"	1	
	66"	2	
	79"	2	
L	Locking Cover		

Intertek

⚠ **WARNING:** This product can expose you to chemicals including nickel which is known to the State of California to cause cancer, and chromium, which is known to the State of California to cause birth defects and/or reproductive harm. For more information go to www.P65Warnings.ca.gov.

HOW TO DESIGNATE A MODEL:

85	2	5	125	H	B	DST1
Series Number	Cabinet Size 1=10"H x 3"D 2=14"H x 5"D 3=20"H x 5"D	Unit Length (feet) 2, 3, 4, 5, 6, 7, 8, 9, 0 (enter 0 for 10')	Watts per Foot 8510= 250 max 8520=500 max 8530=750 max	Voltage E = 120V F = 208V G = 277V H=240V	Air Flow B=Bottom in F=Front in	Factory Installed Options blank=none R1, R2, or R9=Relay T1 or T2=Thermostat DS=Disconnect (see control option chart)
Step 1	Step 2	Step 3	Step 4	Step 5	Step 6	Step 7

Features

- Front In/Top Out or Bottom In/Top Out air pattern
- 16 gauge steel housing powder coated with beige finish
- Tubular pre-wired wireway with 40 Amp capacity
- Connection boxes for right or left hand wiring with combination ½" - ¾" knockouts at back and bottom
- Stainless steel element with Aluminum fins
- Linear limit type thermal overload with automatic reset
- Limited by max amp draw of 25 Amps (with no controls)
- Made in U.S.A.
- Pencil proof louver design
- Custom colors available, consult factory
  Note: Not for residential applications
  Note: Disconnect limits amperage to 16 Amps

Product Specifications

CABINET:
Rugged 16 gauge front cover with discharge louvers in sloped top design. Pencil proof louver design for sloped outlet and front inlet grill. The finish shall be durable powder coated paint. Air flow available as bottom in - top out, or front in - top out.

ELEMENT:
All steel high mass element construction with Nickel-Chromium resistance wire embedded in compacted efficient dielectric to ensure proper heat transfer. Aluminum fins mechanically bonded to steel tube allows for increased surface area and even heat transfer.

LIMIT CONTROLS:
Automatic reset hydraulic thermal overload covers full length of heating element and shuts down heater when safe operating temperatures are exceeded.

WIRING:
Connection boxes in either end with ½ inch to ¾ inch knockouts at back and bottom. Tubular prewired wire way with 40 Amp capacity.

CONTROLS:
Optional built in tamper resistant thermostat and disconnect.

MOUNTING:
Heater shall be surface mounted to wall or mullion. Bottom inlet units must be mounted a minimum of 4 inches above finished floor front inlet.

Voltage & Wattage Specification

Voltage	Standard Wattages Per Foot	Heater Lengths
120-277	100,125,150,165,187,200,250	2' through 10'

Standard Models

HEATER LENGTH	WATTS per FOOT	8510 SERIES	8520 SERIES	8530 SERIES
		3” Depth x 10” Height Max watts per foot = 250	5” Depth x 14” Height Max watts per foot = 500	5” Depth x 20” Heigh Max watts per foot = 750
		MFG MODEL NUMBER	MFG MODEL NUMBER	MFG MODEL NUMBER
2’	100-250	8512	8522	8532
	333-750			
3’	100-250	8513	8523	8533
	333-750			
4’	100-250	8514	8524	8534
	333-750			
5’	100-250	8515	8525	8535
	333-750			
6’	100-250	8516	8526	8536
	333-750			
7’	100-250	8517	8527	8537
	333-750			
8’	100-250	8518	8528	8538
	333-750			
9’	100-250	8519	8529	8539
	333-750			
10’ *	100-250	8510	8520	8530
	333-750			

Note: All models qualify for international use
Note: Products listed in this section are custom built and subject to 100% cancellation/restocking charges.
*120V not available in 10’ units

In-Built Control Options

SUFFIX	DESCRIPTION
T1	In-Built Tamper Proof, Single Pole, Bimetal Thermostat (0°-110°F temp. range, 25 Amp)
T2	In-Built Tamper Proof, Double Pole, Bimetal Thermostat (0°-110°F temp. range, 25 Amp)
DS	Double Pole Disconnect Switch, 16 Amp

Note: Due to size limitations, 8510 Series convectors can only have thermostats as In-Built options

SUFFIX	DESCRIPTION
R1	DPST Relay, 30 Amps, up to 277V, 120V coil
R2	SPST Relay, 18 Amps @ 277V (max), 24V coil
R9	24V Transformer and SPST Relay 22 Amps @ 240V, 18 Amps @ 277V (max), 24V coil (cannot be used in conjunction with T2 option)

Mounting/Air Flow Options

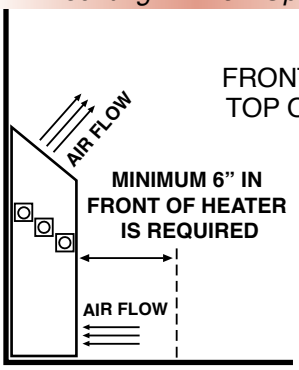

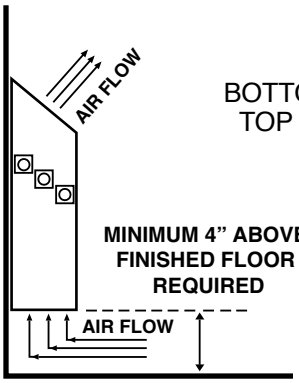

Intertek

⚠ **WARNING:** This product can expose you to chemicals including nickel which is known to the State of California to cause cancer, and chromium, which is known to the State of California to cause birth defects and/or reproductive harm. For more information go to www.P65Warnings.ca.gov.

Features

- Single phase heaters available in all common voltages from 120V to 600V
- 11 gauge perforated steel housing powder coated with textured ivory finish
- Tamper proof left side control panel houses built-in single pole thermostat - range 40°F-110°F and disconnect switch. Thermostat on 120V-277V units is line voltage and low voltage (24V) on 346V-600V units
- Linear limit type thermal overload with automatic reset
- Tamper proof fasteners
- Stainless steel element with Aluminum fins
- Made in U.S.A.

  Note: Not for residential applications

HOW TO DESIGNATE A MODEL:

H	880	3	100
Element Voltage E=120 F=208 G=277 H=240 L=346 P=480 U=600	Series Number	Unit Length 1=18″ 2=28″ 3=36″ 4=48″ 5=60″ 6=72″	Unit Wattage 050=500 075=750 100=1000 125=1250 150=1500 200=2000

Left Side View

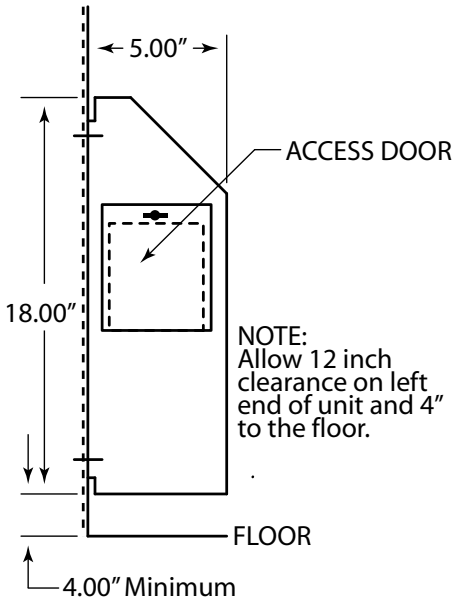

Product Specifications

CABINET:
Institutional enclosure 11 gauge perforated steel with sloped top design. Heavy duty end caps welded to the enclosure. Control compartment for housing thermostat and disconnect switch is accessible by use of security type fastener. The entire enclosure is protected by epoxy powder coated paint finish.

ELEMENT:
All steel high mass element construction with Nickel-Chromium resistance wire embedded in compacted efficient dielectric to ensure proper heat transfer. Aluminum fins mechanically bonded to steel tube allows for increased surface area and even heat transfer.

LIMIT CONTROLS:
Automatic reset hydraulic thermal overload covers full length of heating element and shuts down heater when safe operating temperatures are exceeded.

WIRING:
Wiring connections shall be made in left end of cabinet enclosure. Wiring must enter into control enclosure behind perforated steel grill.

CONTROLS:
All controls are accessible only through control enclosure door. Security type fasteners restrict access to controls. Built in thermostat and disconnect switch with manual adjustment are located in control enclosure.

Optional In-Built Controls

SUFFIX	DESCRIPTION
T2	Tamperproof, Hydraulic, Double pole In-Built thermostat range 40°-110°F, 25 Amp
24V*	24 Volt In-Built single pole thermostat for 120V 208V, 240V & 277V models. 40°-110°F

*Not available on international models

Standard Models

MFG CATALOG NUMBER	MFG MODEL NUMBER	WATTS	BTU'S	VOLTS	AMPS	LENGTH (IN.)
08990002	E8801050	500	1706	120	4.167	18
08990602	F8801050			208	2.404	
08991202	H8801050			240	2.083	
08991802	G8801050			277	1.805	
08992402	L8801050			346	1.445	
08993002	P8801050			480	1.042	
08993602	U8801050			600	0.833	
08990102	E8802075	750	2560	120	6.25	28
08990702	F8802075			208	3.606	
08991302	H8802075			240	3.125	
08991902	G8802075			277	2.708	
08992502	L8802075			346	2.168	
08993102	P8802075			480	1.563	
08993702	U8802075			600	1.25	
08990202	E8803100	1000	3413	120	8.333	36
08990802	F8803100			208	4.808	
08991402	H8803100			240	4.167	
08992002	G8803100			277	3.610	
08992602	L8803100			346	2.890	
08993202	P8803100			480	2.083	
08993802	U8803100			600	1.667	
08990302	E8804125	1250	4266	120	10.417	48
08990902	F8804125			208	6.010	
08991502	H8804125			240	5.208	
08992102	G8804125			277	4.513	
08992702	L8804125			346	3.613	
08993302	P8804125			480	2.604	
08993902	U8804125			600	2.083	
08990402	E8805150	1500	5120	120	12.5	60
08991002	F8805150			208	7.212	
08991602	H8805150			240	6.25	
08992202	G8805150			277	5.415	
08992802	L8805150			346	4.335	
08993402	P8805150			480	3.125	
08994002	U8805150			600	2.5	
08990502	E8806200	2000	6826	120	16.667	72
08991102	F8806200			208	9.615	
08991702	H8806200			240	8.333	
08992302	G8806200			277	7.220	
08992902	L8806200			346	5.780	
08993502	P8806200			480	4.167	
08994102	U8806200			600	3.333	

International Models

MFG CATALOG NUMBER	MFG MODEL NUMBER	WATTS	BTU'S	VOLTS	AMPS	LENGTH (IN.)
09841402	M8801050i	500	1706	220	2.3	18
09841502	H8801050i			240	2.1	
09841602	M8802075i	750	2560	220	3.4	28
09841702	H8802075i			240	3.1	
09841802	M8803100i	1000	3413	220	4.5	36
09841902	H8803100i			240	4.2	
09842002	M8804125i	1250	4266	220	5.7	48
09842102	H8804125i			240	5.2	
09842202	M8805150i	1500	5120	220	6.8	60
09842302	H8805150i			240	6.3	
09842402	M8806200i	2000	6826	220	9.1	72
09842502	H8806200i			240	8.3	

Intertek

⚠ WARNING: This product can expose you to chemicals including nickel which is known to the State of California to cause cancer, and chromium, which is known to the State of California to cause birth defects and/or reproductive harm. For more information go to www.P65Warnings.ca.gov.

Features

- Front In / Front Out air pattern
- 16 gauge steel housing powder coated with textured beige finish
- Tubular pre-wired wireway with 40 Amp capacity
- Connection boxes for right or left hand wiring with combination ½" - ¾" knockouts at back and bottom
- Steel heating element with steel fins
- Linear limit thermal overload with automatic reset
- Recess trim frame included
- Custom colors available, contact factory
- Made in U.S.A.
  Note: Not for residential applications

HOW TO DESIGNATE A MODEL:

M41	25	F	48	1000	T
Series Number	Cabinet Size 25=11"H x 4"D 45=20"H x 5"D	Voltage/Phase F=208V, 1 Phase H=240V, 1 Phase G=277V, 1 Phase J=208V, 3 Phase K=240V, 3 Phase	Unit Length (Inches) 24, 36, 48, 60, or 72	Total Wattage	Control Option Blank=None T or T2=Thermostat R, R2, or R9=Relay (See control option chart)

Product Specifications

CABINET:
4100 series casing shall be of square design with front inlet and outlet grills suitable for recess installation. The cabinet is fabricated from 16 gauge cold rolled steel and finished with powder coated baked enamel. Junction boxes are available for left or right wiring and connected by pre-wired 40 Amp capacity wireway.

ELEMENT:
All steel high mass element construction with Nickel-Chromium resistance wire embedded in compacted efficient dielectric to ensure proper heat transfer. Aluminum fins mechanically bonded to steel tube allows for increased surface area and even heat transfer.

LIMIT CONTROLS:
Automatic reset hydraulic thermal overload covers full length of heating element and shuts down heater when safe operating temperatures are exceeded.

WIRING:
Wiring connections shall be made in left end of cabinet enclosure. Wiring must enter into control enclosure behind perforated steel grill.

CONTROLS:
All controls are accessible only through control enclosure door. Security type fasteners restrict access to controls. Built in thermostat with manual adjustment are located in control enclosure.

M4125 Dimensions - Cabinet Sizes 4” Deep x 11” High

LENGTH (IN.)	WT. (LBS)	WATTS per FOOT AVAILABLE	VOLTS AVAILABLE	PH
24	20	187 250 333	208 240 277	1
36	33			
48	39			
60	49			
72	56			

M4145 Dimensions - Cabinet Sizes 5” Deep x 20” High

LENGTH (IN.)	WT. (LBS)	WATTS per FOOT AVAILABLE	VOLTS AVAILABLE	PH
24	45	187 250 333	208 240 277	1
36	53			
48	63			
60	77			
72	92			
24	47	500 666	208 240 277	1
36	57			
48	67			
60	82			
72	100			

LENGTH (IN.)	WT. (LBS)	WATTS per FOOT AVAILABLE	VOLTS AVAILABLE	PH
24	49	750	208 240 277	1
36	60			
48	71			
60	87			
72	106			
24	49	500 666 750	208 240	3
36	60			
48	71			
60	87			
72	106			

Note: Products listed in this section are custom built and subject to 100% cancellation/restocking charges

In-Built Control Options for Single Phase Units

SUFFIX	DESCRIPTION
T	In-Built Tamper Proof, Single Pole, Hydraulic Thermostat - 40°-110°F temp. range, 25 Amps
T2	In-Built Tamper Proof, Double Pole, Hydraulic Thermostat - 40°-110°F temp. range, 25 Amps
R	DPST Relay, 30 Amps, up to 277V, 120V coil
R2	SPST Relay, 18 Amps @ 277V (max), 24V coil
R9	24V Transformer and SPST Relay, 22 Amps @24V, 18 Amps @ 277V (max), 24V coil

Note: No In-Built control options for 3 phase models

12” Control Section

UNIT LENGTH	MFG MODEL 4125	MFG MODEL 4145
12”	MSE4120-12	MSE4140-12

Note: Control section required when relay is ordered

Solid Back Panel

UNIT LENGTH	MFG MODEL 4125	MFG MODEL 4145
24”	MS4122	MS4142
36”	MS4123	MS4143
48”	MS4124	MS4144
60”	MS4125	MS4145
72”	MS4126	MS4146

3000 Series Fan Forced Ceiling Heater

Intertek

Standard Models

WHITE		SELECTABLE INSTALLATION WATTAGE	MAX BTUs	VOLTS	MAX AMPS
MFG CATALOG NUMBER	MFG MODEL NUMBER				
09488202	E3035DWBW	750 or 1500	5120	120	13
09488302	E3038DWBW	900 or 1800	6143	120	15
09488802	H3032DWBW	750 or 1000 - 1500 or 2000	6826	208 / 240	8
09489002	G3032DWBW	2000	6826	277	7

- Wattage selectable at time of installation - models shipped wired to highest wattage
- Fan purge circuit (has 2 wire control circuit for use with remote wall thermostat)
- Models may not be used with remote double pole thermostat
- Drywall depth embossments on back can
- Powder coated 18 gauge steel front
- Manual reset thermal limit
- Steel block fin element
- Propeller style fan blade - 1060 RPM / 100 CFM
- Weight 6 lbs.
- Optional field installed control voltage relays available
- Rough in dimensions - 9 ¼" Wide - 12 ⅛" High - 3 ⅝" Deep
- Grill dimensions: 9 25/32" Wide - 13" High
- Made in U.S.A.

Field Installed Accessories

MFG CATALOG NUMBER	MFG MODEL NUMBER	DESCRIPTION
09968402	30R	24 VOLT RELAY
09968502	30R2	120 VOLT RELAY
09515002	30R8	208/240 VOLT RELAY
09514902	30R7	277 VOLT RELAY
09969702	303EX8RW	1" EXTENDER
09969602	303EX16RW	2" EXTENDER
09969502	303EX32RW	4" SURFACE MOUNT FRAME
04600302	TB3000	T-BAR FRAME
DISCONNECT INCLUDED		

⚠ **WARNING:** This product can expose you to chemicals including nickel which is known to the State of California to cause cancer, and chromium, which is known to the State of California to cause birth defects and/or reproductive harm. For more information go to www.P65Warnings.ca.gov.

3380 Series Commercial Fan Forced Ceiling Heater

Intertek

⚠ **WARNING:** This product can expose you to chemicals including nickel which is known to the State of California to cause cancer, and chromium, which is known to the State of California to cause birth defects and/or reproductive harm. For more information go to www.P65Warnings.ca.gov.

Product Specifications

The heaters are to be constructed of a heavy gauge steel housing. The finish shall be baked-on powder coat in Ceiling White color. The units shall be available in ratings from 1500 through 4800 Watts with an optional factory installed single pole thermostat.

The heaters have a low speed 600-RPM motor, which drives a vane axial blower to deliver a quite 175 CFM's of down flow air. The heating element shall be of the block finned type with large, parallel steel fins for quick heat transfer. Unit shall have as standard, a manual reset capillary type limit control, for added safety. Unit weight 22 pounds.

Features & Standard Models

Recess, Surface, Or "T" Bar Mounting

- Fan purge circuit (has 2 wire control circuit for use with remote wall thermostat)
- Disconnect switch
- White powder coated 18 gauge steel grill
- Manual reset thermal limit
- Steel block fin element
- Vane axial fan blade:
  1.5KW - 4.0KW units: 700 RPM motor; 175 CFM
  4.8KW units: 900 RPM motor; 200 CFM
- Rough in dimensions:
  14 ⅛" wide x 19 ½" high x 4" deep
- Grill dimensions:
  16 3/16" wide x 21" high
- Optional factory installed tamper resistant thermostat
- Made in U.S.A.

MFG CATALOG NUMBER	MFG MODEL NUMBER	KW	BTUs	VOLTS	PH	AMPS	TEMP RISE
03664802	E3383D-RP	1.5	5120	120	1	12.5	27 °F
03662902	F3386D-RP	4.0	13600	208		19.2	72 °F
03663002	F3387D-RP	4.8	16382	208		23.1	76 °F
03663402	HF3384D-RP	2.0 / 1.5	6826/5120	240/208		8.3/7.2	36 °F
03663502	HF3385D-RP	3.0 / 2.3	10200/7679	240/208		12.5/10.8	54 °F
03663602	HF3386D-RP	4.0 / 3.0	13600/10200	240/208		16.8/14.4	72 °F
03663702	H3387D-RP	4.8	16382	240		20	76 °F
03665002	G3383D-RP	1.5	5120	277		5.4	27 °F
03664102	G3384D-RP	2.0	6826	277		7.2	36 °F
03664202	G3385D-RP	3.0	10200	277		10.8	54 °F
03664302	G3386D-RP	4.0	13600	277		14.4	72 °F
03664402	G3387D-RP	4.8	16382	277		17.3	76 °F
International Models							
04708802	M3384D-RPi	1680	5734	220	1	7.6	30 °F
04708902	M3385D-RPi	2520	8600			11.5	50 °F
04709002	M3386D-RPi	4032	13761			18.3	72 °F

Accessories

MFG CATALOG NUMBER	MFG MODEL NUMBER	DESCRIPTION	WT. (LBS)
03778502	BOX3310	Additional Back Can	10
03811002	3380EX33	Surface Mounting Adapter	5
04600202	TB3380	2X2 T-Bar Mounting Kit	7
Thermostat- Add suffix T to model		Factory installed single pole. Range-40° F-110° F	

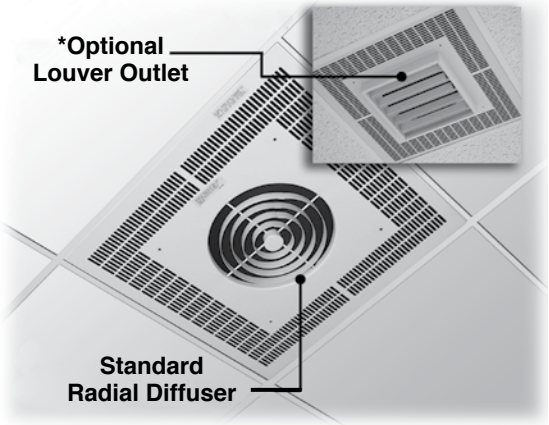

⚠ **WARNING:** This product can expose you to chemicals including nickel which is known to the State of California to cause cancer, and chromium, which is known to the State of California to cause birth defects and/or reproductive harm. For more information go to www.P65Warnings.ca.gov.

Notes

- Optional controls must be factory installed. Field installation is not acceptable and violates Listing and factory warranty.
- Degree F air rise is measured at 1,000 F.P.M. and 600 CFM Throw designed for 8 to 12 foot ceilings. dB = 63.9
- Unit Weight: 45 lbs. | Low Voltage: UT1001
- Recommended remote thermostats: Low voltage: UT1001
- Maximum mounting is 12' AFF

Product Specifications

Contractor shall supply and install heavy duty ceiling mounted forced air electric heater(s) of the wattage, voltage and phase as indicated on the plans. The heater shall be so designed to provide an even distribution of heated air to the space to be heated by drawing return air in the periphery of the heater, across and through the element and be discharged from the center section of the heater by means of an electric motor and axial flow fan blade.

Heaters shall be recessed type and mounted flush with the finished ceiling. The return grille assembly shall be constructed of a one piece heavy gauge steel with 1/4" slots for return air and concentric rings for uniform air discharge. Grille assembly shall be attached to chassis by tamper-resistant (allen head) machine screws. All parts of enclosure shall be heavy gauge steel, zinc coated both sides and finished in neutral off white powder coat paint.

Enclosure shall be constructed of 1/8" x 3/8" rounded edge horizontal steel louvers which shall be spaced for maximum opening of 5/16". Louvers shall be welded at every intersection to evenly spaced 1/8" diameter vertical members. Discharge grille to have concentric rings for uniform air discharge. Grille assembly shall be attached to chassis by tamper-resistant (allen head) machine screws. All part of enclosure shall be heavy gauge steel, Zinc coated both sides and finished in neutral off white colored powder coat finish.

Motor shall be permanently lubricated, unit bearing, totally enclosed, with impedance protection. Motors shall operate at no more than 1300 RPM and shall be same voltage as the heater.

Heaters shall have a rating of 600 CFM at 1,000 F.P.M. with a maximum temperature rise of 44°F and 63.9 dB sound level.

Element assemblies shall consist of two or three corrosion resistant steel sheathed type elements mechanically bonded to common corrosion resistant steel fins. Each sheathed element shall consist of helically coiled Nickel Chromium alloy resistant wire completely embedded in and surrounded by magnesium oxide, enclosed and wedged into corrosion resistant steel sheaths. Elements shall have 2" cold conductor pins extending into sheath and shall have a density of no more than 60 Watts per inch.

Heaters shall be equipped with a "manual reset" thermal overload which disconnects elements and motor in the event normal operating temperatures are exceeded. For safety, if opened due to abnormal temperature, thermal overload shall remain open until manually reset. Automatic reset thermal overloads which allow the element to continue to cycle under abnormal conditions will not be accepted. Heaters shall be ETL listed.

Features

- White powder coated 20 gauge grill
- All units have manual reset thermal limit, 24V control transformer, and 24V relay (A1 suffix)
- Enclosed steel fin sheath element
- Rough in dimensions: 23 1/16" sq. x 9 1/8" deep
- Maximum mounting is 12'
- Made in U.S.A.

C ETL LISTED US
Intertek

Standard Models

MFG CATALOG NUMBER	MFG MODEL NUMBER	KW	BTUs	VOLTS	PH	AMPS	TEMP RISE
03153302	F3482A1	2	6826	208	1	9.6	15 °F
03152602	H3482A1			240		8.3	
03149702	G3482A1			277		7.2	
03184702	P3482A1			480		4.2	
04702802	J3482A1	2	6826	208	3	5.6	15 °F
03984902	K3482A1			240		4.8	
04702402	Y3482A1			480		2.4	
03153202	F3483A1	3	10200	208	1	14.4	22 °F
03148402	H3483A1			240		12.5	
03148102	G3483A1			277		10.8	
03184802	P3483A1			480		6.3	
04706402	J3483A1	3		208	3	8.3	
03985002	K3483A1			240		7.2	
04702502	Y3483A1			480		3.6	
03153602	F3484A1	4	13600	208	1	19.2	30 °F
03155402	H3484A1			240		16.8	
03148002	G3484A1			277		14.4	
03185002	P3484A1			480		8.3	
03148702	J3484A1	4		208	3	11.1	
03148202	K3484A1			240		9.7	
03185802	Y3484A1			480		4.8	
03154802	F3485A1	5	17000	208	1	24.1	37 °F
03155102	H3485A1			240		20.8	
03149602	G3485A1			277		18.1	
03185402	P3485A1			480		10.4	
03150802	J3485A1	5		208	3	13.9	
03180902	K3485A1			240		12.1	
03184002	Y3485A1			480		6.1	
03661002	PT3480	Recess Frame - Weight 5 lbs.					
International Models							
0470971	M3482T2i	2	6826	220	1	9.1	15 °F
0470988	N3482T2i			240		8.3	
0470995	M3483T2i	3	10200	220		13.6	22 °F
0471008	N3483T2i			240		12.5	
0471015	M3484T2i	4	13600	220		18.2	30 °F
0471022	N3484T2i			240		16.7	

Factory Installed Control Sections

SUFFIX	DESCRIPTION
S	Disconnect Switch
T	Thermostat (0° - 110°F)
RELAYS FOR FIELD SUPPLIED CONTROL - NIGHTLY SETBACK	
R*	Relay Control Voltage Same as Heater (control voltage field supplied)
R1	Relay 24V Control Voltage (control voltage field supplied)
R2	Relay 120V Control Voltage (control voltage field supplied)

* 208/240 volt models only

Product Dimensions

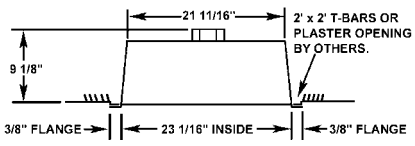

SIDE VIEW
(ALL SIDES IDENTICAL)

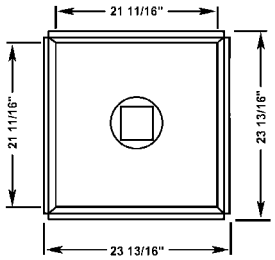

TOP VIEW

Product Specifications

CONSTRUCTION: Made in U.S.A.

Contractor shall supply and install heavy duty ceiling mounted forced air electric heater(s) of the wattage, voltage and phase as indicated on the plans. The heater shall so be designed to provide an even distribution of heated air to the space to be heated by drawing return air in the periphery of the heater, across and through the element and be discharged from the center section of the heater by mean of an electric motor and axial flow fan blade.

MOTOR: Motor shall be permanently lubricated, unit bearing, totally enclosed shaded pole type with impedance protection. Motors shall operate at no more than 1300 RPM and shall be same voltage as the heater.

PERFORMANCE: Heaters shall have a rating of 600 CFM at 1,000 F.P.M. with a maximum temperature rise of 44°F and 63.9 dB rating.

ELEMENT: Element assemblies shall consist of two or three corrosion resistant steel sheathed type elements mechanically bonded to common corrosion resistant steel fins. Each sheathed element shall consist of helically coiled Nickel Chromium alloy resistant wire completely embedded in and surrounded by Magnesium Oxide, enclosed and wedged into corrosion resistant steel sheaths. Elements shall have 2" cold conductor pins extending into sheath and shall have a density of no more than 60 watts per inch.

THERMAL OVERLOAD: Heaters shall be equipped with a "manual reset" thermal overload which disconnects elements and motor in the event normal operating temperatures are exceeded. For safety, if opened due to abnormal temperature, thermal overload shall remain open until manually reset. Automatic reset thermal overloads which allow the element to continue to cycle under abnormal conditions will not be accepted.

COMMERCIAL AND INSTITUTIONAL APPLICATIONS: Use in - vestibules, entrance ways, lobbies, rest rooms and small office and guard building applications.

⚠ **WARNING:** This product can expose you to chemicals including nickel which is known to the State of California to cause cancer, and chromium, which is known to the State of California to cause birth defects and/or reproductive harm. For more information go to www.P65Warnings.ca.gov.

Product Dimensions

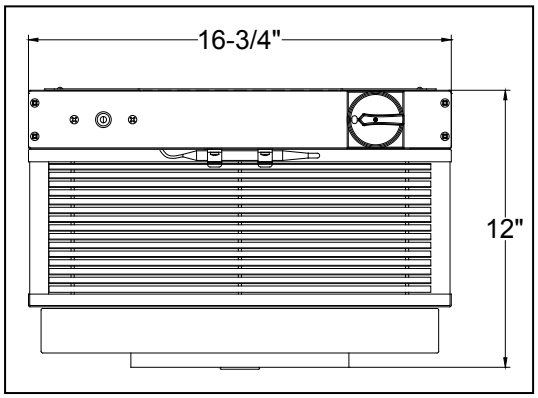

Standard Models

MFG CATALOG NUMBER	MFG MODEL NUMBER	KW	BTUs	VOLTS	PH	AMPS	TEMP RISE
03982602	F3472A1	2	6826	208	1	9.6	15 °F
03982702	H3472A1			240		8.3	
03982802	G3472A1			277		7.2	
03243302	P3472A1			480		4.2	
03983702	J3472A1	2	6826	208	3	5.6	
03983802	K3472A1			240		4.8	
04702202	Y3472A1			480		2.4	
03810602	F3473A1	3	10200	208	1	14.4	22 °F
03982902	H3473A1			240		12.5	
03983002	G3473A1			277		10.8	
03243402	P3473A1			480		6.3	
03983902	J3473A1	3	10200	208	3	8.3	
03984002	K3473A1			240		7.2	
04702302	Y3473A1			480		3.6	
03983102	F3474A1	4	13600	208	1	19.2	30 °F
03983202	H3474A1			240		16.8	
03983302	G3474A1			277		14.4	
03243502	P3474A1			480		8.3	
03984102	J3474A1			208	3	11.1	
03984202	K3474A1			240		9.7	
03243602	Y3474A1			480		4.8	
03983402	F3475A1	5	17000	208	1	24.1	37 °F
03983502	H3475A1			240		20.8	
03983602	G3475A1			277		18.1	
03243702	P3475A1			480		10.4	
03984302	J3475A1			208	3	13.9	
03984402	K3475A1			240		12.1	
03243802	Y3475A1			480		6.1	
International Models							
04709102	M3472T2i	2	6826	220	1	9.1	15 °F
04709202	N3472T2i			240		8.3	
04709302	M3473T2i	3	10200	220		13.6	22 °F
04709402	N3473T2i			240		12.5	
04709502	M3474T2i	4	13600	220		18.2	30 °F
04709602	N3474T2i			240		16.7	

Notes

- Optional controls must be factory installed. Field installation is not acceptable and violates Listing and factory warranty.
- Degree F air rise is measured at 1,000 F.P.M. and 600 CFM. Throw designed for 8 to 12 foot ceilings
- Decibel rating 63.9
- Unit weight: 42 lbs.
- Recommended Remote Thermostats:
  Low Voltage: UT1001
- Maximum mounting is 12' AFF

Factory Installed Control Sections

SUFFIX	DESCRIPTION
S	Disconnect Switch
T	Single Pole Thermostat (40°-110°F)
RELAYS FOR FIELD SUPPLIED NIGHTLY SETBACK	
R*	Relay Control Voltage Same as Heater (control voltage field supplied) *208/240 volt models only
R1	Relay 24V Control Voltage (control voltage field supplied)
R2	Relay 120V Control Voltage (control voltage field supplied)

Product Description

For Surface Or Recessed Installation, Radiant Ceiling Panels radiate energy like the solar radiation which warms us, heats objects, not the air. With no moving parts, these heating panels create gentle warmth and toasty comfort.

Radiant Ceiling Panels provide a low surface temperature and broad heat distribution. Clean, gentle comfortable heat that is ideal for offsetting perimeter heat loss or neutralizing downdrafts over glass. These versatile and flexible panels may be used virtually anywhere in homes, schools, hospitals, motels and a broad variety of other commercial or industrial installations.

Product Specifications

CONSTRUCTION:
Radiant Ceiling Panels shall be made of highest quality steel casing. Front panel shall be painted with textured powder coated finish. Electric Resistance element is fixed between dielectric material and insulation. Two inches of insulation is compressed to one inch by back panel to minimize upward heat loss and radiant efficiency. Radiant panels shall have 36" pre-wired flexible cable for easy installation and wiring connections. CP Series is 20 Gauge metal. Made in U.S.A.

INSTALLATION:
CP Series shall be designated as 2x2 or 2x4 size. All panels are 1" thick. The size shall be nominal dimension to be manufactured to fit drop ceiling systems. Standard units will fit regular "T" Bar frame. For regular or trim line or other frame sizes, special construction is required. RCP Series shall be used in recess mounting applications. RCP Series shall be 2" less in width to recess between nominal 24" center ceiling joists. RCP Series shall be complete with recess frame for finished construction.

ACCESSORIES:
Surface mounting frames shall be optional for surface mounting the CP Series, and are Aluminum mill finish. Frames can be painted white to match panel.

OPTIONS:
Silk-screening the exposed surface to match ceiling tiles is available, as well as silicone sealed metal parts for high humidity applications.

C ETL LISTED US
Intertek

⚠ **WARNING:** This product can expose you to chemicals including nickel which is known to the State of California to cause cancer, and chromium, which is known to the State of California to cause birth defects and/or reproductive harm. For more information go to www.P65Warnings.ca.gov.

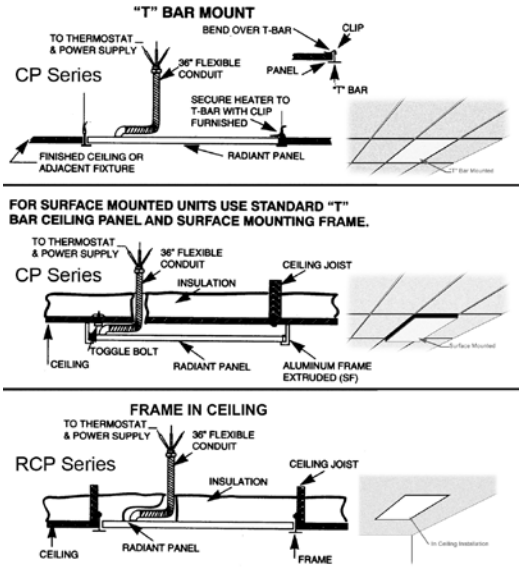

CP Series - "T" Bar & Surface Mounted

MFG CATALOG NUMBER	MFG MODEL NUMBER	WATTS	BTUs	AMPS	VOLTS	WT. (LBS)
Dimensions: 2' x 4' (Nominal) x 1"						
04587102	CP805	500	1707	2.4	208	20 lb.
04587202	CP125			4.2/2.1	120/240	
04587302	CP705			1.8	277	
04587402	CP807	750	2560	3.6	208	20 lb.
04587502	CP127			6.3/3.1	120/240	
04587602	CP707			2.7	277	
Dimensions: 2' x 2' (Nominal) x 1"						
04587702	CP802	250	853	1.2	208	13 lb.
04587802	CP122			2.1/1.0	120/240	
04587902	CP702			.9	277	
04588002	CP803	375	1280	1.8	208	13 lb.
04588102	CP123			3.1/1.6	120/240	
04588202	CP703			1.4	277	
04591002	SF400 Surface Frame for 2' x 4' Panels (CP only)					10 lb.
04590902	SF200 Surface Frame for 2' x 2' Panels					6 lb.

RCP Series - Frame in Ceiling Mounted

MFG CATALOG NUMBER	MFG MODEL NUMBER	WATTS	BTUs	AMPS	VOLTS	WT. (LBS)
Dimensions: 2' x 4' (Including Recessing Frame)						
04588302	RCP805	500	1707	2.4	208	30 lb.
04588402	RCP125			4.2/2.1	120/240	
04588502	RCP705			1.8	277	
04588602	RCP807	750	2560	3.6	208	30 lb.
04588702	RCP127			6.3/3.1	120/240	
04588802	RCP707			2.7	277	
Dimensions: 2' x 2' (Including Recessing Frame)						
04588902	RCP802	250	853	1.2	208	19 lb.
04589002	RCP122			2.1/1.0	120/240	
04589102	RCP702			.9	277	
04589202	RCP803	375	1280	1.8	208	19 lb.
04589302	RCP123			3.1/1.6	120/240	
04589402	RCP703			1.4	277	

International Models

MFG CATALOG NUMBER	MFG MODEL NUMBER	WATTS	BTUs	AMPS	VOLTS	WT. (LBS)
Dimensions: 2' x 4' (Nominal) x 1"						
04710302	CP2205i	420	1434	1.9	220	20
04710402	CP125i	500	1707	4.2/4.1	120/240	
04710502	CP2207i	630	2150	2.9	220	20
04710602	CP127i	750	2560	6.3/3.1	120/240	
Dimensions: 2' x 2' (Nominal) x 1"						
04710702	CP2202i	210	717	0.95		13
04710802	CP122i	250	853	2.1/1.0	120/240	
				0.9	277	
04710902	CP2203i	315	1075	1.4	220	13
04711002	CP123i	375	1280	3.1/1.6	120/240	
				1.4	277	

MFG CATALOG NUMBER	MFG MODEL NUMBER	WATTS	BTUs	AMPS	VOLTS	WT. (LBS)
Dimensions: 2' x 4' (Including Recessing Frame)						
04711102	RCP2205i	420	1434	1.9	220	30
04711202	RCP125i	500	1707	4.2/4.1	120/240	
04711302	RCP2207i	630	2150	2.9	220	
04711402	RCP127i	750	2560	6.3/3.1	120/240	
Dimensions: 2' x 2' (Including Recessing Frame)						
04711502	RCP2202i	210	717	0.95	220	19
04711602	RCP122i	250	853	2.1/1.0	120/240	
04711702	RCP2203i	315	1075	1.4	220	
04711802	RCP123i	375	1280	3.1/1.6	120/240	

Intertek

⚠ **WARNING:** This product can expose you to chemicals including nickel which is known to the State of California to cause cancer, and chromium, which is known to the State of California to cause birth defects and/or reproductive harm. For more information go to www.P65Warnings.ca.gov.

Product Description

Cove Heaters have a subtly contoured concave surface with a saw-tooth profile. The concave parabolic face plate performs a two-fold function: (1) it focuses the infrared rays and (2) directs the heat downward along cold perimeters and toward the center of the room. The sawtooth surface design increases the radiating surface area by 45%, thereby increasing the comfort level of the room faster and ensuring more rapid recovery from heat losses.

Product Specifications

Furnish and install Electric Cove Heaters where specified. The heaters shall be constructed of .096” thick Aluminum. The heater surface shall be concave in contour and saw-tooth in profile. The finish shall be of powder coat white finish. The heaters shall be available in ratings from 450 through 1250 Watts, at 120, 240, 208 and 277 Volts. The heating element shall be of Nichrome wire, embedded in Magnesium Oxide powder, enclosed and sealed in Aluminum metal tubing. The heater shall be listed by ETL and the elements shall be supplied with a one year limited warranty.
Made in U.S.A.

Standard Models

MFG CATALOG NUMBER	MFG MODEL NUMBER	WATTS	BTUs	AMPS	VOLTS	LENGTH	WT. (LBS)
04575802	CV4512X	450	1536	3.8	120	42”	7
04575902	CV45X	450		1.9	240		
04576002	CV45YX	450		2.2	208		
04576102	CV4527X	450		1.6	277		
04576202	CV6012X	600	2048	5.0	120	60”	10
04576302	CV60X	600		2.5	240		
04576402	CV60YX	600		2.9	208		
04576502	CV6027X	600		2.2	277		
04576602	CV7512X	750	2560	6.3	120	72”	13
04576702	CV75X	750		3.1	240		
04576802	CV75YX	750		3.6	208		
04576902	CV7527X	750		2.7	277		
04577002	CV9012X	900	3072	7.5	120	84”	14
04577102	CV90X	900		3.8	240		
04577202	CV90YX	900		4.3	208		
04577302	CV9027X	900		3.2	277		
04577402	CV10012X	1000	3413	8.3	120	96”	17
04577502	CV100X	1000		4.2	240		
04577602	CV100YX	1000		4.8	208		
04577702	CV10027X	1000		3.6	277		
04577802	CV11012X	1100	3754	9.2	120	108”	19
04577902	CV110X	1100		4.6	240		
04578002	CV110YX	1100		5.3	208		
04578102	CV11027X	1100		4.0	277		
04578202	CV12512X	1250	4266	10.4	120	120”	21
04578302	CV125X	1250		5.2	240		
04578402	CV125YX	1250		6.0	208		
04578502	CV12527X	1250		4.5	277		
International Models							
04711902	CV4522Xi	450	1536	2.0	220	42”	7
04712002	CV45Xi			1.9	240		
04712102	CV6022Xi	600	2048	2.7	220	60”	10
04712202	CV60Xi			2.5	240		
04712302	CV7522Xi	750	2560	3.4	220	72”	13
04712402	CV75Xi			3.1	240		
04712502	CV9022Xi	900	3072	4.1	220	84”	14
04712602	CV90Xi			3.8	240		
04712702	CV10022Xi	1000	3413	4.5	220	96”	17
04712802	CV100Xi			4.2	240		
04712902	CV11022Xi	1100	3754	5.0	220	108”	19
04713002	CV110Xi			4.6	240		
04713102	CV12522Xi	1250	4266	5.7	220	120”	21
04713202	CV125Xi			5.2	240		

Accessories & Dimensions

MFG CATALOG NUMBER	MFG MODEL NUMBER	DESCRIPTION	WT. (LBS)
04579202	CVCBX	Ceiling Bracket*	½
04578602	CVB42X	42” Blank Section	6
04578702	CVB60X	60” Blank Section	8
04578802	CVB84X	84” Blank Section	12
04579102	CVSP	Aerosol Touch-up Paint	1

*Order 2 for units up to 72”
Order 3 for units over 72”

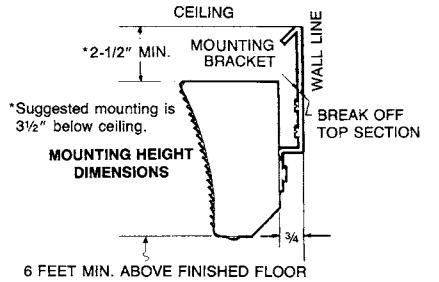

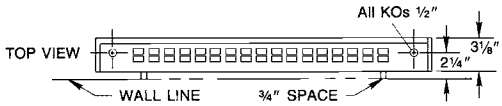

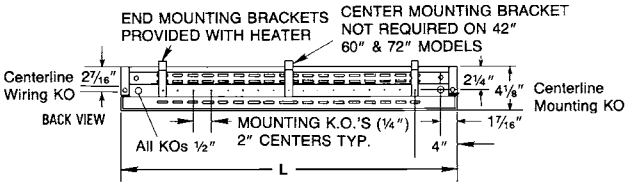

305 Series Midsized Commercial Fan Forced Wall Heater - Multiple Wattage

WARNING: This product can expose you to chemicals including nickel which is known to the State of California to cause cancer, and chromium, which is known to the State of California to cause birth defects and/or reproductive harm. For more information go to www.P65Warnings.ca.gov.

Features

- Wattage selectable at time of installation
- Models shipped wired to highest wattage
- Approved for horizontal mounting - right or left discharge
- Fan purge circuit
- Disconnect switch
- Drywall depth embossments on back can
- 18 gauge powder coated steel & extruded Aluminum front
- Manual reset thermal limit
- Steel block fin element
- Propeller style fan blade: 1060 RPM motor; 100 CFM
- Weight = 6 lbs.
- Rough in dimensions: 9 ¼" Wide x 12 ⅛" High x 3 ⅝" Deep
- Grill dimensions: 10" Wide x 13 ⅛" High
- Approved for wall or ceiling installation
- Made in U.S.A.

Standard Models

MFG CATALOG NUMBER	MFG MODEL NUMBER	SELECTABLE INSTALLATION WATTAGE	MAX BTUs	VOLTS	MAX AMPS
TAMPERPROOF IN-BUILT DOUBLE POLE THERMOSTAT (40º - 100º TEMPERATURE RANGE)					
09962102	E3055T2DWB	750 or 1500	5120	120	12.5
09962202	E3058T2DWB	900 or 1800	6143	120	15.0
09962502	F3052T2DWB	1000 or 2000	6826	208	8.3
09456902	F30522T2DWB	500 or 750 or 1000 or 1250 or 1500 or 1750 or 2250	7680	208	10.8
09962802	H3052T2DWB	750 or 1000 - 1500 or 2000	6826	208 / 240	8.3
09457202	H30522T2DWB	500 or 750 or 1000 or 1250 or 1500 or 1750 or 2250	7680	240	9.4
09963102	G3052T2DWB	2000	6826	277	7.2

Accessories

MFG CATALOG NUMBER	MFG MODEL NUMBER	DESCRIPTION
09969402	305EX8	1" EXTENDER
09969302	305EX16	2" EXTENDER
09969202	305EX32	4" SURFACE MOUNT FRAME

4400 Series Low Profile Commercial Fan Forced Wall Heater - With Wall Box

WARNING: This product can expose you to chemicals including nickel which is known to the State of California to cause cancer, and chromium, which is known to the State of California to cause birth defects and/or reproductive harm. For more information go to www.P65Warnings.ca.gov.

- Powder coated 20 gauge steel front with extruded Aluminum frame
- Manual reset thermal limit
- Finned tubular steel element
- Propeller style fan blade - 2200 RPM/70 CFM
- Weight 9 lbs.
- Rough in dimensions: 14 ½" Wide x 7 ⅛" High x 3 ½" Deep
- Grill dimensions:16 ⅞" Wide x 8" High
- Unit not approved for ceiling mount applications
- Unit can be positioned to allow left, right or top discharge
- Made in U.S.A.

Note: Please see *Draft Barrier Heaters - General Product Information* page for custom color availability; add 10% to net heater cost.

Standard Models

MFG CATALOG NUMBER	MFG MODEL NUMBER	VOLTS	WATTS	MAX BTUs	AMPS
DOUBLE POLE IN-BUILT THERMOSTAT (RANGE 0º - 110º F)					
03283202	F4420T2RP	208	2000	6826	9.6
03283302	HF4475T2RP	240/208	750 / 562	2560 / 1920	3.1 / 2.7
03283402	HF4410T2RP		1000 / 750	3413 / 2560	4.2 / 3.6
03283502	HF4415T2RP		1500 / 1125	5120 / 3840	6.3 / 5.4
03283602	HF4420T2RP		2000 / 1500	6826 / 5120	8.3 / 7.2
SINGLE POLE IN-BUILT THERMOSTAT (RANGE 0º - 110º F)					
03283702	E4475TRP	120	750	2560	6.25
03283802	E4410TRP		1000	3413	8.33
03283902	E4415TRP		1500	5120	12.5
03284002	F4420TRP	208	2000	6826	9.6

Accessories

MFG CATALOG NUMBER	MFG MODEL NUMBER	DESCRIPTION	WT. (LBS)
03299102	4400EX8	1" SEMI RECESSING EXTENDER	2
03299002	4400EX16	2" SEMI RECESSING EXTENDER	3
03298902	4400EX32	4" SURFACE MOUNTING FRAME	4
03284402	4300PB	WALL PLATE ADAPTOR (OD 21.5"x12.25")	1

3340 Series Heavy Duty Wall Heater

Features

- Dual vane axial fan blades
- Lockable disconnect switch
- Automatic purge
- Manual reset thermal limit
- Low voltage control
- Steel block fin elements
- Optional built in thermostat with 40° - 110°F range
- Heavy duty 18 ga. powder coated grille
- Extruded aluminum trim frame, no visible screws
- 4" Surface mounting frame included (3340EX32)
- Rough in dimensions 30-1/2 in wide x 19-1/2 in high x 4" deep
- When ordered without thermostat, terminal block included for field connection of remote low voltage single stage thermostat
- Optional BMS relay requires field supplied 24V source
- Optional 2" semi recess frame available (3340EX16)
- Made in U.S.A.

⚠ **WARNING:** This product can expose you to chemicals including nickel which is known to the State of California to cause cancer, and chromium, which is known to the State of California to cause birth defects and/or reproductive harm. For more information go to www.P65Warnings.ca.gov.

Intertek

Product Specifications

Furnish and install Heavy-Duty Forced Air wall heaters, where specified. The heaters shall be constructed of a heavy 18 gauge steel housing with an extruded Aluminum frame. The rough-in dimensions are 30 ½" Wide x 19 ½" High x 4" Deep. The units shall be available in ratings of 6000,8000, & 9600 watts at 208 volt (1 or 3Ø), 240 volt (1 or 3Ø), 277 volt (1Ø), & 480 volt (1 or 3Ø). The heaters shall have (2) low-speed 600 RPM, 4-pole motors which drives vane axial blowers to deliver a quiet 350 CFM of down flow air. The two heating elements shall be of the sealed tubular type with large, parallel steel fins for quick heat transfer. Units shall have as a standard, a manual reset thermal overload cut-off for added safety, fan delay switch, and manual disconnect switch. Optional built-in tamper proof thermostat which shall be calibrated to provide a range of 0°F. to 110°F. An optional 24 volt control relay* shall be installed for control from Building Management System (BMS). Optional accessory shall include a semi-recess mounting adapter and a 16 gauge Heavy Duty Grille. All heaters shall be listed by ETL. The heating element shall be supplied with a manufacturer's 1-year limited warranty.

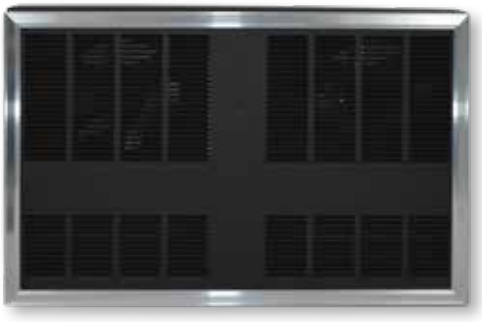

Standard Models

MODEL LISTING FOR BROWN MODELS

MFG CATALOG NUMBER	MFG MODEL NUMBER	MFG CATALOG NUMBER	MFG MODEL NUMBER	MFG CATALOG NUMBER	MFG MODEL NUMBER	MFG CATALOG NUMBER	MFG MODEL NUMBER	WATTS	BTUs	VOLTS	PHASE	AMPS	WT. (LBS)
NO STAT / NO RELAY		**WITH STAT ONLY**		**RELAY ONLY**		**WITH STAT AND RELAY**							
04759602	F3346	04758402	F3346T	04761002	F3346-BMS	04762302	F3346T-BMS	6000	20478	208	1	30.64	68
04759702	H3346	04758502	H3346T	04761102	H3346-BMS	04762402	H3346T-BMS			240	1	26.6	
04759802	G3346	04760902	G3346T	04761202	G3346-BMS	04762502	G3346T-BMS			277	1	23.3	
04759902	J3346	04758602	J3346T	04761302	J3346-BMS	04762602	J3346T-BMS			208	3	18.5	
04760002	K3346	04758702	K3346T	04761402	K3346-BMS	04762702	K3346T-BMS			240	3	16.1	
04760102	P3346	04758802	P3346T	04761502	P3346-BMS	04762802	P3346T-BMS			480	3	8.0	
04760202	G3348	04758902	G3348T	04761602	G3348-BMS	04762902	G3348T-BMS	8000	27304	277	1	30.5	
04760302	J3348	04759002	J3348T	04761702	J3348-BMS	04763002	J3348T-BMS			208	3	24.0	
04760402	K3348	04759102	K3348T	04761802	K3348-BMS	04763102	K3348T-BMS			240	3	20.9	
04760502	P3348	04759202	P3348T	04761902	P3348-BMS	04763202	P3348T-BMS			480	3	10.5	
04760602	J3349	04759302	J3349T	04762002	J3349-BMS	04763302	J3349T-BMS	9600	32765	208	3	28.5	
04760702	K3349	04759402	K3349T	04762102	K3349-BMS	04763402	K3349T-BMS			240	3	24.7	
04760802	P3349	04759502	P3349T	04762202	P3349-BMS	04763502	P3349T-BMS			480	3	12.4	

Optional Accessories

MFG CATALOG NUMBER	MFG MODEL NUMBER
04764102	3340EX16 - Semi Recess Frame
---	Add HD (Suffix) 16 Gauge HD Grille

3340 Series are custom built and subject to 100% cancellation/restock charges.

3340 Series Heavy Duty Wall Heater

Features

- Dual vane axial fan blades
- Lockable disconnect switch
- Automatic purge
- Manual reset thermal limit
- Low voltage control
- Steel block fin elements
- Optional built in thermostat with 40° - 110°F range
- Heavy duty 18 ga. powder coated grille
- Extruded aluminum trim frame, no visible screws
- 4" Surface mounting frame included (3340EX32)
- Rough in dimensions 30-1/2 in wide x 19-1/2 in high x 4" deep
- When ordered without thermostat, terminal block included for field connection of remote low voltage single stage thermostat
- Optional BMS relay requires field supplied 24V source
- Optional 2" semi recess frame available (3340EX16)
- Made in U.S.A.

⚠ **WARNING:** This product can expose you to chemicals including nickel which is known to the State of California to cause cancer, and chromium, which is known to the State of California to cause birth defects and/or reproductive harm. For more information go to www.P65Warnings.ca.gov.

Intertek

Product Specifications

Furnish and install Heavy-Duty Forced Air wall heaters, where specified. The heaters shall be constructed of a heavy 18 gauge steel housing with an extruded Aluminum frame. The rough-in dimensions are 30 ½" Wide x 19 ½" High x 4" Deep. The units shall be available in ratings of 6000,8000, & 9600 watts at 208 volt (1 or 3Ø), 240 volt (1 or 3Ø), 277 volt (1Ø), & 480 volt (1 or 3Ø). The heaters shall have (2) low-speed 600 RPM, 4-pole motors which drives vane axial blowers to deliver a quiet 350 CFM of down flow air. The two heating elements shall be of the sealed tubular type with large, parallel steel fins for quick heat transfer. Units shall have as a standard, a manual reset thermal overload cut-off for added safety, fan delay switch, and manual disconnect switch. Optional built-in tamper proof thermostat which shall be calibrated to provide a range of 0°F. to 110°F. An optional 24 volt control relay* shall be installed for control from Building Management System (BMS). Optional accessory shall include a semi-recess mounting adapter and a 16 gauge Heavy Duty Grille. All heaters shall be listed by ETL. The heating element shall be supplied with a manufacturer's 1-year limited warranty.

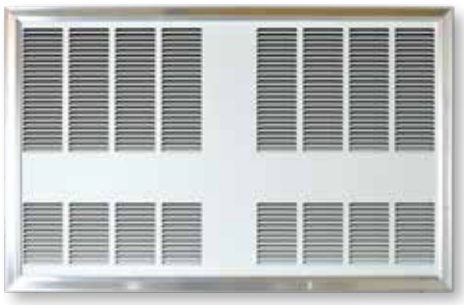

Standard Models

MODEL LISTING FOR WHITE MODELS

MFG CATALOG NUMBER	MFG MODEL NUMBER	MFG CATALOG NUMBER	MFG MODEL NUMBER	MFG CATALOG NUMBER	MFG MODEL NUMBER	MFG CATALOG NUMBER	MFG MODEL NUMBER	WATTS	BTUs	VOLTS	PHASE	AMPS	WT. (LBS)
NO STAT / NO RELAY		WITH STAT ONLY		RELAY ONLY		WITH STAT AND RELAY							
04917602	F3346-W	04918902	F3346T-W	04920202	F3346-BMS-W	04921502	F3346T-BMS-W	6000	20478	208	1	30.64	68
04917702	H3346-W	04919002	H3346T-W	04920302	H3346-BMS-W	04921602	H3346T-BMS-W			240	1	26.6	
04917802	G3346-W	04919102	G3346T-W	04920402	G3346-BMS-W	04921702	G3346T-BMS-W			277	1	23.3	
04917902	J3346-W	04919202	J3346T-W	04920502	J3346-BMS-W	04921802	J3346T-BMS-W			208	3	18.5	
04918002	K3346-W	04919302	K3346T-W	04920602	K3346-BMS-W	04921902	K3346T-BMS-W			240	3	16.1	
04918102	P3346-W	04919402	P3346T-W	04920702	P3346-BMS-W	04922002	P3346T-BMS-W			480	3	8.0	
04918202	G3348-W	04919502	G3348T-W	04920802	G3348-BMS-W	04922102	G3348T-BMS-W	8000	27304	277	1	30.5	
04918302	J3348-W	04919602	J3348T-W	04920902	J3348-BMS-W	04922202	J3348T-BMS-W			208	3	24.0	
04918402	K3348-W	04919702	K3348T-W	04921002	K3348-BMS-W	04922302	K3348T-BMS-W			240	3	20.9	
04918502	P3348-W	04919802	P3348T-W	04921102	P3348-BMS-W	04922402	P3348T-BMS-W			480	3	10.5	
04918602	J3349-W	04919902	J3349T-W	04921202	J3349-BMS-W	04922502	J3349T-BMS-W	9600	32765	208	3	28.5	
04918702	K3349-W	04920002	K3349T-W	04921302	K3349-BMS-W	04922602	K3349T-BMS-W			240	3	24.7	
04918802	P3349-W	04920102	P3349T-W	04921402	P3349-BMS-W	04922702	P3349T-BMS-W			480	3	12.4	

Optional Accessories

MFG CATALOG NUMBER	MFG MODEL NUMBER
04764202	3340EX16-W - Semi Recess Frame
---	Add HD (Suffix) 16 Gauge HD Grille

3340 Series are custom built and subject to 100% cancellation/restock charges.

3320 Series Commercial Fan Forced Wall Heater

Features

- Disconnect switch
- Automatic fan delay circuit
- Automatic reset thermal limit
- Powder coated 18 gauge steel grill with extruded Aluminum front frame
- Steel block fin element
- Vane axial fan blade: 600 RPM motor; 175 CFM
- Rough-in dimensions: 14 ⅛" Wide x 19 ½" High x 4" Deep
- Grill dimensions: 15 29/32" Wide x 20 27/32" High
- Built-In tamper proof thermostat
- Made in U.S.A.

WARNING: This product can expose you to chemicals including nickel which is known to the State of California to cause cancer, and chromium, which is known to the State of California to cause birth defects and/or reproductive harm. For more information go to www.P65Warnings.ca.gov.

Intertek

Product Specifications

Heavy-Duty Forced Air wall heaters, where specified. The heaters shall be constructed of a heavy 18 gauge steel housing with an extruded Aluminum frame. The rough-in dimensions are 14 ⅛" Wide x 19 ½" High x 4" Deep. The units shall be available in ratings from 750 to 4800 Watts at 240, 208, and 277 Volts. The heaters shall have a low-speed 600 RPM, 4-pole motor which drives a vane axial blower to deliver a quiet 175 CFM of down flow air. The heating element shall be of the sealed tubular type with large, parallel steel fins for quick heat transfer. Unit shall have as a standard, a thermal overload cut-off for added safety, fan delay switch and built-in tamper proof thermostat which shall be calibrated to provide a range of 0°F. to 110°F. and manual disconnect switch. Optional accessories shall include a surface and semi-recess mounting adapter. All heaters shall be listed by ETL. The heating element shall be supplied with a manufacturer's 1-year limited warranty.

Standard Models

MFG CATALOG NUMBER	MFG MODEL NUMBER	WATTS	BTUs	VOLTS	AMPS	WT. (LBS)
IN-BUILT SINGLE POLE TAMPERPROOF THERMOSTAT (0° - 110° TEMPERATURE RANGE) FOR DOUBLE POLE THERMOSTAT REPLACE "T" IN MODEL NUMBER WITH "T2" -- ADD $50						
1-Phase						
03820502	E3321TD-RP	750	2560	120	6.25	26
03819902	E3322TD-RP	1000	3413		8.3	
03808802	E3323TD-RP	1500	5120		12.5	
03809302	F3326TD-RP	4000	13649	208	19.2	
03810202	F3327TD-RP	4800	16378		23	
03809402	HF3323TD-RP	1500 / 1125	5120 / 3840	240 / 208	6.2 / 5.4	
03809502	HF3324TD-RP	2000 / 1500	6824 / 5120		8.3 / 7.2	27
03809602	HF3325TD-RP	3000 / 2250	10236 / 7677		12.5 / 10.8	29
03809702	HF3326TD-RP	4000 / 3000	13649 / 7677		16.7 / 14.4	
03810302	H3327TD-RP	4800	16378	240	20	
03809802	G3323TD-RP	1500	5120	277	4.1	26
03809902	G3324TD-RP	2000	6824		7.2	27
03810002	G3325TD-RP	3000	7677		10.8	29
03810102	G3326TD-RP	4000	13649		14.4	
03810402	G3327TD-RP	4800	16378		17.3	
International Models						
03964202	M3324TD-RPi	3360 / 1680	6824 / 5732	220	15.3 / 7.64	27
03964302	M3325TD-RPi	4032 / 2016	13761 / 6879		18.3 / 9.16	

Accessories

MFG CATALOG NUMBER	MFG MODEL NUMBER	DESCRIPTION	TYPE	WT. (LBS)
03778502	BOX 3310	Additional Rough-in Box	Field Installed	3
03784502	3320EX33	4" Surface Mounting Frame		1
03829302	3320EX16	2" semi recess extender		1
-----	Suffix - HD	16 Gauge Steel Heavy Duty Grill	Factory Installed	2

3320 Series Commercial Fan Forced Wall Heater

Features

- Disconnect switch
- Automatic fan delay circuit
- Automatic reset thermal limit
- Powder coated 18 gauge steel grill with extruded Aluminum front frame
- Steel block fin element
- Vane axial fan blade: 600 RPM motor; 175 CFM
- Rough-in dimensions: 14 ⅛" Wide x 19 ½" High x 4" Deep
- Grill dimensions: 15 29/32" Wide x 20 27/32" High
- Built-In tamper proof thermostat
- Made in U.S.A.

⚠ **WARNING:** This product can expose you to chemicals including nickel which is known to the State of California to cause cancer, and chromium, which is known to the State of California to cause birth defects and/or reproductive harm. For more information go to www.P65Warnings.ca.gov.

C ETL LISTED US
Intertek

Product Specifications

Heavy-Duty Forced Air wall heaters, where specified. The heaters shall be constructed of a heavy 18 gauge steel housing with an extruded Aluminum frame. The rough-in dimensions are 14 ⅛" Wide x 19 ½" High x 4" Deep. The units shall be available in ratings from 3000 to 4800 Watts at 240, 208, and 277 Volts. The heaters shall have a low-speed 600 RPM, 4-pole motor which drives a vane axial blower to deliver a quiet 175 CFM of down flow air. The heating element shall be of the sealed tubular type with large, parallel steel fins for quick heat transfer. Unit shall have as a standard, a thermal overload cut-off for added safety, fan delay switch and built-in tamper proof thermostat which shall be calibrated to provide a range of 0°F. to 110°F. and manual disconnect switch. Optional accessories shall include a surface and semi-recess mounting adapter. All heaters shall be listed by ETL. The heating element shall be supplied with a manufacturer's 1-year limited warranty.

Standard Models

MFG CATALOG NUMBER	MFG MODEL NUMBER	WATTS	BTUs	VOLTS	AMPS	WT. (LBS)
IN-BUILT SINGLE POLE TAMPERPROOF THERMOSTAT (0° - 110° TEMPERATURE RANGE)						
3-Phase						
04763602	J3325TD-RP	3000	10239	208	8.3	30
04763702	K3325TD-RP		10239	240	7.2	
04763802	P3325T-RP		10239	480*	3.6	
03980702	J3326TD-RP	4000	13649	208	11.11	
03980902	K3326TD-RP		13649	240	9.64	
04763902	P3326T-RP		13652	480*	4.8	
03980802	J3327TD-RP	4800	16378	208	13.33	
03981002	K3327TD-RP		16378	240	11.57	
04764002	P3327T-RP		16382	480*	5.8	

*Disconnect switch not available on 480V units

Accessories

MFG CATALOG NUMBER	MFG MODEL NUMBER	DESCRIPTION	TYPE	WT. (LBS)
03778502	BOX 3310	Additional Rough-in Box	Field Installed	3
03784502	3320EX33	4" Surface Mounting Frame		1
03829302	3320EX16	2" semi recess extender		1
-----	Suffix - HD	16 Gauge Steel Heavy Duty Grill	Factory Installed	2

Without Tamper Proof Cover

⚠ **WARNING:** This product can expose you to chemicals including nickel which is known to the State of California to cause cancer, and chromium, which is known to the State of California to cause birth defects and/or reproductive harm. For more information go to www.P65Warnings.ca.gov.

Features

- Powder coated bar stock steel tamper proof grille, with extruded Aluminum frame and 16 gauge housing
- In-Built double pole tamper proof thermostat with a 40°-120°F temperature range and positive off; 3 phase heaters have 3 pole thermostat for positive off position with a 40°-120° temperature range
- Manual reset thermal limit switch
- Corrosion resistant steel tubular element with brazed steel fins
- Permanently lubricated, unit bearing, shaded pole motor with impedance protection
- Propeller type fan blade: 1400 RPM motor; 245 CFM
- Factory installed options:
  - contactors (AFC & AFH series)
  - circuit breakers (AFH series)
  - control transformers (AFH series)
- Made in U.S.A.
- Wall box included with heater

Intertek

Standard Models

HEATER		WALL BOX		WATTS	BTUs	VOLTS	PH	AMPS	WT. (LBS)
MFG CATALOG NUMBER	MFG MODEL NUMBER	MFG CATALOG NUMBER	MFG MODEL NUMBER						
SERIES 3420 - ROUGH-IN DIMENSIONS: 19 5/8" H x 14 7/16" W x 4 1/8" D GRILL DIMENSIONS: 21 1/2" H x 17 1/2" W									
06911302	F3422T	06915702	Box 3420	2000	6826	208	1	9.6	41
06911902	H3422T					240		8.3	
06911702	G3422T					277		7.2	
03846202	J3422T			2000	6826	208	3	5.6	
03846402	K3422T					240		4.8	
06912302	F3423T			3000	10239	208	1	14.4	
06913102	H3423T					240		12.5	
06912702	G3423T					277		10.8	
03238502	J3423T			3000	10239	208	3	8.3	
03846502	K3423T					240		7.3	
06913302	F3424T			4000	13652	208	1	19.2	
06913802	H3424T					240		16.7	
06913602	G3424T					277		14.4	
06914002	J3424T					208	3	11.1	
06914102	K3424T					240		9.6	
06914302	F3425T			5000	17065	208	1	24	
06915102	H3425T					240		20.8	
06914802	G3425T					277		18.1	
06915302	J3425T					208	3	13.9	
06915602	K3425T					240		12.0	

HEATER		WALL BOX		WATTS	BTUs	VOLTS	PH	AMPS	WT. (LBS)
MFG CATALOG NUMBER	MFG MODEL NUMBER	MFG CATALOG NUMBER	MFG MODEL NUMBER						
SERIES 3450 - ROUGH-IN DIMENSIONS: 23 5/16" H x 14 7/16" W x 4 1/8" D GRILL DIMENSIONS: 25" H x 17 1/2" W									
06916102	F3452T	06919102	Box 3450	2000	6826	208	1	9.6	55
06916802	H3452T					240		8.3	
03122902	G3452T					277		7.2	
03846602	J3452T			2000	6826	208	3	5.6	
03846801	K3452T					240		4.8	
06876802	F3453T			3000	10239	208	1	14.4	
06917702	H3453T					240		12.5	
03122802	G3453T					277		10.8	
03846702	J3453T			3000	10239	208	3	8.3	
03846901	K3453T					240		7.3	
06917802	F3454T			4000	13652	208	1	19.2	
06918102	H3454T					240		16.7	
03119902	G3454T					277		14.4	
06918502	J3454T					208	3	11.1	
03166502	K3454T					240		9.6	
03129802	F3455T			5000	17065	208	1	24.03	
03121302	H3455T					240		20.8	
03123802	G3455T					277		18.1	
06919002	J3455T					208	3	13.9	
03130702	K3455T					240		12.0	

Contractor shall supply and install heavy duty wall mounted forced air electric heaters of the wattage, voltage and phase as specified. The heater shall so be designed to provide an even distribution of heated air to the space to be heated by drawing return air in the peripheral area of the heater across and through the element which shall then be discharged from the center section of the heater by means of an electric motor and axial flow fan blade. Heaters shall be recessed type to extend no more than 1 ½" from the finished wall or surface mounted to extend no more than 5 ¾" from the finished wall or semi-recessed type to extend no more than 3 ½" from finished wall or semi-recessed type to extend no more than 2 ½" from finished wall.

ENCLOSURE:
Heater front shall withstand 10.8 ft. lbs. (324 poundals) impact and 400 lbs. static force applied to an 8 sq. in. area at center grille location with less than 1/16" permanent distortion. The combination return and supply grille assembly shall be constructed of 1/16" x 3/8" rounded edge horizontal steel louvers which shall be spaced for maximum opening of ¼". Louvers shall be welded at every intersection to three evenly spaced 1/16" diameter vertical members and completely framed in a heavy gauge natural anodized Aluminum extrusion. Front assembly shall be attached to the chassis by hidden tamper-resistant (Allen-head) machine screws. All other parts shall be 16 gauge steel Zinc coated, both sides finished in a bronze colored baked powder coat finish.

MOTOR:
Motor shall be a permanently lubricated unit bearing, totally enclosed shaded pole type with impedance protection. Motors shall operate at no more than 1400 RPM and shall be same voltage as the heater. A protective shield shall surround the motor to separate return air from heated air.

PERFORMANCE:
Heaters shall have a rating of 245 CFM at 660 F.P.M. with a maximum temperature rise of 73°F.

ELEMENTS:
Element assemblies shall consist of two or three corrosion resistant steel sheathed type elements mechanically bonded to common corrosion resistant steel fins. Each sheathed element shall consist of helically coiled Nickel Chromium alloy resistant wire completely embedded in and surrounded by Magnesium Oxide, enclosed and wedged into corrosion resistant steel sheaths. Elements shall have 2" cold conductor pins extending into the sheath and shall have a density of no more than 60 Watts per inch.

THERMAL OVERLOAD:
Heaters shall be equipped with a "manual reset" thermal overload which disconnects elements and motor in the event normal operating temperatures are exceeded. For safety, if opened due to abnormal temperature, thermal overload shall remain open until manually reset. Automatic reset thermal overloads which allow the element to continue to cycle under abnormal conditions will not be accepted.

APPROVAL:
Heaters shall be ETL Listed.

OPTIONAL CONTROL SYSTEMS:
Heaters shall be operated from wall-mounted, line voltage, heavy-duty (tamper-proof) thermostats. Heaters with built-in, pre-wired contactors shall be operated from wall-mounted, line voltage, pilot duty (tamper-proof) thermostats. Heaters built with, pre-wired contactors (and control transformers) shall be operated from wall-mounted, pilot duty (24V) or (120V) wall-mounted tamper-proof thermostats. Heaters shall be controlled by integrally mounted thermostats. Thermostats shall be heavy-duty, hydraulic type with a temperature range of 40°F - 120°F for double pole units and 40°F - 120°F for three pole units and with remote sensing bulb placed in the return air. Thermostats shall be electrically rated at least 125% of heater rating. Thermostats shall be electrically rated at least 125% of heater rating. Thermostats shall also act as a disconnect by breaking all ungrounded conductors in the OFF position. (Thermostat control knob shall be covered by a 16 gauge tamper-proof access plate to prevent adjustment by unauthorized personnel.)

CONTACTORS:
Where required, heaters shall be equipped with heavy-duty, definite purpose contactors with flame path separators and dust covers. Contactors shall cycle all ungrounded conductors. Contactors shall have holding coils (of the same voltage as the heater) or (120 Volts) or (24 Volts).

CONTROL TRANSFORMERS:
Heater shall be equipped with a Class 2 control transformer, sealed rating of 20 VA, to supply control circuits of (24 Volts) or (120 Volts). (120 Volt secondaries not available in single phase heaters over 3 KW).

CIRCUIT BREAKERS (3450 Series Only):
Heaters shall be equipped with built-in circuit breakers in order to allow the heaters to be supplied from feeder taps. A separate switch providing a positive off for control circuits shall be included where required. Circuit breakers and control switches shall be arranged so that all line side conductors will be separately enclosed when heater front is removed for servicing so that no current carrying parts are accessible without the use of additional tools.

Factory Installed Accessories

Units with transformers must have a contactor. A control transformer with 120V secondary is available on all 3-phase models, 208V/240V 1-phase units up to 3KW, and up to 4KW on 277V. All heaters must be installed with a wall box.

MFG MODEL NUMBER	DESCRIPTION	SERIES OPTIONS	
		3420	3450
Suffix - R	Contactor with Coil same as heater	YES	YES
Suffix - R1	Contactor with 24V Coil	YES	YES
Suffix - R2	Contactor with 120V Coil	YES	YES
Suffix - C	Circuit Breakers - all models	NO	YES
Suffix - A1	Control Transformers With 24V Secondary	NO	YES
Suffix - A2	Control Transformers With 120V Secondary	NO	YES

MFG CATALOG NUMBER	MFG MODEL NUMBER	DESCRIPTION	WT. (LBS)
06916002	3420EX34	4” Surface Mounting Sleeve	5
06915902	3420EX16	2” Semi-Recessing Sleeve	4
06915802	3420EX8	1” Semi-Recessing Sleeve	3
06915702	Box 3420	Wall Box for 3420	4
06919402	3450EX34	4” Surface Mounting Sleeve	6
06919302	3450EX16	2” Semi-Recessing Sleeve	4
06919202	3450EX8	1” Semi-Recessing Sleeve	3
06919102	Box 3450	Wall Box for 3450	5

3450SD Series Setback on Demand Heavy-Duty Fan Forced Wall Heaters

3450SD White
Without Tamper Proof Cover

3450SD Bankers Bronze
(Tamper Proof)

Intertek

Features

- Heavy duty architectural style
- Automatic fan purge circuit
- Manual reset thermal limit switch
- Powder coated bar stock grill with extruded Aluminum frame and 16 gauge housing
- Set desired comfort level and set-back level up to 12°F
- The thermostat learns your schedule based on detected movement and returns the area to the desired temperature using two stage operation. If the thermostat does not detect movement within one hour, setback occurs to the preset level
- Occupancy sensor defaults to economy mode after one hour, sensor has a 94 degree angular range and a 16’ linear range
- Tamper proof grill covers the thermostat
- Corrosion resistant steel tubular element with brazed steel fins
- Permanently lubricated, unit bearing, shaded pole motor with impedance protection
- Factory preset to correct operating system voltage of heater
- Propeller type fan blade: -1400 RPM motor; 245 CFM
- Wall box included with heater
- Available in white, consult factory
- Made in USA

⚠ **WARNING:** This product can expose you to chemicals including nickel which is known to the State of California to cause cancer, and chromium, which is known to the State of California to cause birth defects and/or reproductive harm. For more information go to www.P65Warnings.ca.gov.

Features

HEATER		WATTS	BTUs	VOLTS	PH	AMPS	WT. (LBS)
MFG CATALOG NUMBER	MFG MODEL NUMBER						
SERIES 3450SD - ROUGH-IN DIMENSIONS: 23 1/16” H x 14 1/4” W x 4 1/4” D GRILL DIMENSIONS: 25 1/32” H x 17 7/16” W							
03985102	F3452SD	2000	6826	208	1	9.6	55
03985202	H3452SD			240		8.3	
03985302	G3452SD			277		7.2	
03985402	J3452SD	2000	6826	208	3	5.6	
03985502	K3452SD			240		4.8	
03985602	F3453SD	3000	10239	208	1	14.4	
03985702	H3453SD			240		12.5	
03985802	G3453SD			277		10.8	
03985902	J3453SD	3000	10239	208	3	8.3	
03986002	K3453SD			240		7.3	
03986102	F3454SD	4000	13652	208	1	19.2	
03986202	H3454SD			240		16.7	
03986302	G3454SD			277		14.4	
03986402	J3454SD			208	3	11.1	
03986502	K3454SD			240		9.6	
03986602	F3455SD	5000	17065	208	1	24.03	
03986702	H3455SD			240		20.8	
03986802	G3455SD			277		18.1	
03986902	J3455SD			208	3	13.9	
03987002	K3455SD			240		12.0	

3310 Series Fan Forced Wall Heater - Without Summer Fan Switch

Features

- Powder coated 18 gauge steel front
- Automatic reset thermal limit
- Vane axial fan blade: 600 RPM / 175 CFM
- Rough in dimensions:
  14 ⅛" Wide x 19 ½" High x 4" Deep
- Grill dimensions: 16 3⁄16" Wide x 21" High
- Steel block fin element
- Weight 22 lbs.
- Units with dual wattage, factory wired to highest wattage
- Wattage selectable at time of installation on some models
- Made in U.S.A.

Intertek

WARNING: This product can expose you to chemicals including nickel which is known to the State of California to cause cancer, and chromium, which is known to the State of California to cause birth defects and/or reproductive harm. For more information go to www.P65Warnings.ca.gov.

Standard Models

MODELS WITH IN-BUILT DOUBLE POLE THERMOSTAT (0º - 110º F TEMPERATURE RANGE)							
IVORY		WHITE		WATTS	MAX BTUs	VOLTS	AMPS
MFG CATALOG NUMBER	MFG MODEL NUMBER	MFG CATALOG NUMBER	MFG MODEL NUMBER				
03263402	E3312T2RP	03264802	E3312T2RPW	1000	3413	120	8.3
03263502	E3313T2RP	03264902	E3313T2RPW	1500	5120		12.5
				750	2560		6.25
03263602	F3316T2RP	03265002	F3316T2RPW	4000	13648	208	19.2
03263702	F3317T2RP	03265102	F3317T2RPW	4800	16380		23
03264002	HF3315T2RP	03265402	HF3315T2RPW	3000 / 2250	10240	240 / 208	12.5 / 10.8
				1500 / 1125	5120		6.2 / 5.4
03264102	HF3316T2RP	03265502	HF3316T2RPW	4000 / 3000	13648		16.8 / 14.4
				2000 / 1500	6826		8.3 / 7.2
03264202	H3317T2RP	03265602	H3317T2RPW	4800	16380	240	20.0
03264302	G3314T2RP	03265702	G3314T2RPW	2000	6826	277	7.2
03264402	G3315T2RP	03265802	G3315T2RPW	3000	10240		10.8
03264502	G3316T2RP	03265902	G3316T2RPW	4000	13648		14.4
03264602	G3317T2RP	03266002	G3317T2RPW	4800	16380		17.3

MODELS WITH IN-BUILT SINGLE POLE THERMOSTAT (0º - 110º F TEMPERATURE RANGE)							
03825202	E3312TRP	03826102	E3312TRPW	1000	3413	120	8.3
03806502	E3313TRP	03841602	E3313TRPW	1500	5120		12.5
				750	2560		6.25
03799402	F3316TRP	03841802	F3316TRPW	4000	13648	208	19.2
03803002	F3317TRP	03841902	F3317TRPW	4800	16380		23
03805602	HF3315TRP	03822202	HF3315TRPW	3000 / 2250	10240	240 / 208	12.5 / 10.8
				1500 / 1125	5120		6.2 / 5.4
03799802	HF3316TRP	03822302	HF3316TRPW	4000 / 3000	13648		16.8 / 14.4
				2000 / 1500	6826		8.3 / 7.2
03803102	H3317TRP	03822402	H3317TRPW	4800	16380	240	20.0
03805902	G3314TRP	03842602	G3314TRPW	2000	6826	277	7.2
03807502	G3315TRP	03842702	G3315TRPW	3000	10240		10.8
03800102	G3316TRP	03842802	G3316TRPW	4000	13648		14.4
03791702	G3317TRP	03842902	G3317TRPW	4800	16380		17.3

MODELS WITHOUT AN IN-BUILT THERMOSTAT							
03266202	E3312RP	03267602	E3312RPW	1000	3413	120	8.3
03266302	E3313RP	03267702	E3313RPW	1500	5120		12.5
				750	2560		6.25
03285302	F3316RP	03267802	F3316RPW	4000	13648	208	19.2
03266502	F3317RP	03267902	F3317RPW	4800	16380		23
03266802	HF3315RP	03268202	HF3315RPW	3000 / 2250	10240	240 / 208	12.5 / 10.8
				1500 / 1125	5120		6.2 / 5.4
03266902	HF3316RP	03268302	HF3316RPW	4000 / 3000	13648		16.8 / 14.4
				2000 / 1500	6826		8.3 / 7.2
03267002	H3317RP	03268402	H3317RPW	4800	16380	240	20.0
03267102	G3314RP	03268502	G3314RPW	2000	6826	277	7.2
03267202	G3315RP	03268602	G3315RPW	3000	10240		10.8
03267302	G3316RP	03268702	G3316RPW	4000	13648		14.4
03267402	G3317RP	03268802	G3317RPW	4800	16380		17.3

3310 Series Fan Forced Wall Heater - With Summer Fan Switch

Features

- Powder coated 18 gauge steel front
- Automatic reset thermal limit
- Steel block fin element
- Weight 22 lbs.
- Vane axial fan blade: 600 RPM / 175 CFM
- Grill dimensions: 16 3/16" Wide x 21" High
- Rough in dimensions: 14 1/8" Wide x 19 1/2" High x 4" Deep
- Units with dual wattage, factory wired to highest wattage
- Wattage selectable at time of installation on some models
- Made in U.S.A.

Intertek

WARNING: This product can expose you to chemicals including nickel which is known to the State of California to cause cancer, and chromium, which is known to the State of California to cause birth defects and/or reproductive harm. For more information go to www.P65Warnings.ca.gov.

Product Specifications

Typical Specifications: Furnish and install Electric Forced Air Heaters where specified. The heaters shall be constructed of a heavy gauge steel housing. The rough-in dimensions are 14 1/8" Wide x 19 1/2" High x 4" Deep. The finish shall be powder coated paint in ivory or white color. The units shall be available in ratings from 750 through 4800 Watts. The heaters shall have a low speed 600 RPM motor which drives a vane axial blower to deliver a quiet 175 CFM of down flow air. The heating element shall be of the sealed block fin type with large, parallel steel fins for quick heat transfer. Unit shall have a standard thermal overload cutoff for added safety, a fan switch for fan only operation, and is available with a single pole, or double pole built-in thermostat, or no thermostat. The in-built thermostat shall be calibrated to provide a range of 0°F - 110°F. All heaters shall be listed by ETL. The heating element shall be supplied with a manufacturer's 1 year limited warranty.

Standard Models

MODELS WITH IN-BUILT DOUBLE POLE THERMOSTAT (0º - 110ºF TEMPERATURE RANGE)							
IVORY		WHITE		WATTS	MAX BTUs	VOLTS	AMPS
MFG CATALOG NUMBER	MFG MODEL NUMBER	MFG CATALOG NUMBER	MFG MODEL NUMBER				
03260602	E3312T2SRP	03262002	E3312T2SRPW	1000	3413	120	8.3
03260702	E3313T2SRP	03262102	E3313T2SRPW	1500	5120		12.5
				750	2560		6.25
03260802	F3316T2SRP	03262202	F3316T2SRPW	4000	13648	208	19.2
03260902	F3317T2SRP	03262302	F3317T2SRPW	4800	16380		23
03261202	HF3315T2SRP	03262602	HF3315T2SRPW	3000 / 2250	10240	240 / 208	12.5 / 10.8
				1500 / 1125	5120		6.2 / 5.4
03261302	HF3316T2SRP	03262702	HF3316T2SRPW	4000 / 3000	13648		16.8 / 14.4
				2000 / 1500	6826		8.3 / 7.2
03261402	H3317T2SRP	03262802	H3317T2SRPW	4800	16380	240	20.0

MODELS WITH IN-BUILT SINGLE POLE THERMOSTAT (0º - 110ºF TEMPERATURE RANGE)							
03825702	E3312TSRP	03825902	E3312TSRPW	1000	3413	120	8.3
03796102	E3313TSRP	03840102	E3313TSRPW	1500	5120		12.5
				750	2560		6.25
03777102	F3316TSRP	03840202	F3316TSRPW	4000	13648	208	19.2
03777802	F3317TSRP	03840302	F3317TSRPW	4800	16380		23
03776002	HF3315TSRP	03840702	HF3315TSRPW	3000 / 2250	10240	240 / 208	12.5 / 10.8
				1500 / 1125	5120		6.2 / 5.4
03776902	HF3316TSRP	03840802	HF3316TSRPW	4000 / 3000	13648		16.8 / 14.4
				2000 / 1500	6826		8.3 / 7.2
03777602	H3317TSRP	03840902	H3317TSRPW	4800	16380	240	20.0
International Models							
----	----	03964802	M3315T2SRPWi	3360	11468	220	15.27
				1680	5734		7.64
----	----	03964902	M3316T2SRPWi	4032	13761		18.33
				2016	6881		9.16

Note: Fan switch not available on 277V models. 277V models are available without a fan switch on previous page.

Accessories - All Models

IVORY		WHITE		DESCRIPTION	ACCESSORY TYPE
MFG CATALOG NUMBER	MFG MODEL NUMBER	MFG CATALOG NUMBER	MFG MODEL NUMBER		
03778502	BOX3310	03778502	BOX3310	ADDITIONAL BACK CAN	Field Installed
03299502	3310EX33R	03299602	3310EX33WR	SURFACE MOUNTING FRAME	
SUFFIX D				DISCONNECT SWITCH	Factory Installed

3200 Series Midsized Fan Forced Wall Heater - With Wall Box

Shown with Built-In Thermostat

Features

- Units have white powder coat finish
- Approved for horizontal mounting - right or left discharge
- Drywall depth embossments on back can
- Powder coated 18 gauge steel front
- Manual reset thermal limit
- Finned tubular steel element
- Weight 6 lbs.
- Propeller style fan blade: 2200 RPM / 70 CFM
- Optional field installed In-Built thermostat
- Rough in dimensions: 9 ¼" Wide, 12 ⅛" High, 3 ⅝" Deep
- Grill dimensions: 9 25/32" Wide, 13" High
- Made in U.S.A.

WARNING: This product can expose you to chemicals including nickel which is known to the State of California to cause cancer, and chromium, which is known to the State of California to cause birth defects and/or reproductive harm. For more information go to www.P65Warnings.ca.gov.

Intertek

"TWO WIRE INSTALLATION"

Standard Models

MFG CATALOG NUMBER	MFG MODEL NUMBER	VOLTS	WATTS	MAX BTUs	AMPS
BUILT-IN DOUBLE POLE (POSITIVE OFF) THERMOSTAT 40° - 100°F RANGE					
03834602	F3220T2RPW	208	2000	6826	9.6
03834702	H3275T2RPW	240	750	2560	3.1
03834802	HF3210T2RPW	240/208	1000 / 750	3413 / 2560	4.2 / 3.6
03834902	HF3215T2RPW		1500 / 1125	5120 / 3840	6.3 / 5.4
03835002	HF3220T2RPW		2000 / 1500	6826 / 5120	8.3 / 7.2
03835102	HF3222T2RPW		2250 / 1688	7680 / 5762	9.4 / 8.1
International Models - BUILT-IN DOUBLE POLE (POSITIVE OFF) THERMOSTAT 40° - 100°F RANGE					
03963802	M3210T2RPWi	220	840	2867	3.8
03963902	M3215T2RPWi		1260	4300	5.7
03964002	M3220T2RPWi		1680	5734	7.6
03964102	M3222T2RPWi		1890	6451	8.6
Standard Models - BUILT-IN SINGLE POLE (POSITIVE OFF) THERMOSTAT 40° - 100°F RANGE					
03835202	E3275TRPW	120	750	2560	6.25
03835302	E3210TRPW		1000	3413	8.33
03835402	E3215TRPW		1500	5120	12.5
NO BUILT-IN THERMOSTAT					
03835502	E3275RPW	120	750	2560	6.25
03835602	E3210RPW		1000	3413	8.33
03835702	E3215RPW		1500	5120	12.5
03835802	F3220RPW	208	2000	6826	9.6
03835902	H3275RPW	240	750	2560	3.1
03836002	HF3210RPW	240/208	1000 / 750	3413 / 2560	4.2 / 3.6
03836102	HF3215RPW		1500 / 1125	5120 / 3840	6.3 / 5.4
03836202	HF3220RPW		2000 / 1500	6826 / 5120	8.3 / 7.2
03836302	HF3222RPW		2250 / 1688	7680 / 5762	9.4 / 8.1

Accessories

FIELD INSTALLED COMPONENTS		
MFG CATALOG NUMBER	MFG MODEL NUMBER	DESCRIPTION
03836402	32T1	Single Pole thermostat with positive off for 120V units 40° - 100° F
03836502	32T2	Double Pole thermostat with positive off for 240/208V units 40° - 100° F

SURFACE MOUNTED EXTENDERS & FRAMES		
WHITE		DESCRIPTION
MFG CATALOG NUMBER	MFG MODEL NUMBER	
09969702	303EX8RW	1" EXTENDER
09969602	303EX16RW	2" EXTENDER
09969502	303EX32RW	4" SURFACE MOUNT FRAME

4300 Series Low Profile Fan Forced Wall Heater - With Wall Box

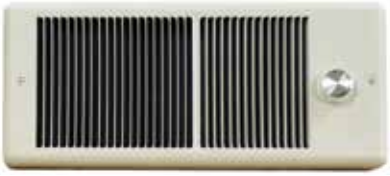

With Built-In Thermostat

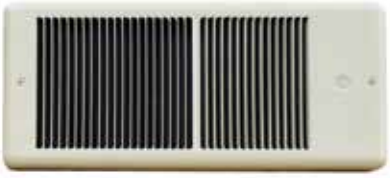

Without Built-In Thermostat

Features

- Available in ivory or white
- Powder coated 20 gauge steel front
- Manual reset thermal limit
- Finned tubular steel element
- Weight 9 lbs.
- Propeller style fan blade - 2200 RPM / 70 CFM
- Rough in dimensions:
  14 ½" Wide, 7 ⅛" High,3 ½" Deep
- Grill dimensions: 16 ¾" Wide, 7 ⅝" High
- Unit not approved for ceiling mount applications
- Unit can be positioned to allow left, right or top discharge
- Made in U.S.A.

⚠ **WARNING:** This product can expose you to chemicals including nickel which is known to the State of California to cause cancer, and chromium, which is known to the State of California to cause birth defects and/or reproductive harm. For more information go to www.P65Warnings.ca.gov.

Intertek

Standard Models

IVORY		WHITE		VOLTS	WATTS	MAX BTUs	AMPS
MFG CATALOG NUMBER	MFG MODEL NUMBER	MFG CATALOG NUMBER	MFG MODEL NUMBER				
DOUBLE POLE IN-BUILT THERMOSTAT (RANGE 0° - 110°F)							
03276902	F4320T2RP	03277402	F4320T2RPW	208	2000	6826	9.6
03277002	HF4375T2RP	03277502	HF4375T2RPW	240/208	750 / 562	2560 / 1920	3.1 / 2.7
03277102	HF4310T2RP	03277602	HF4310T2RPW		1000 / 750	3413 / 2560	4.2 / 3.6
03277202	HF4315T2RP	03277702	HF4315T2RPW		1500 / 1125	5120 / 3840	6.3 / 5.4
03277302	HF4320T2RP	03277802	HF4320T2RPW		2000 / 1500	6826 / 5120	8.3 / 7.2
International Models - DOUBLE POLE IN-BUILT THERMOSTAT (RANGE 0° - 110°F)							
----	----	03964402	M4375T2RPi	220	630	2150	2.9
----	----	03964502	M4310T2RPi		840	2869	3.8
----	----	03964602	M4315T2RPi		1260	4300	5.7
----	----	03964702	M4320T2RPi		1680	5733	7.6
Standard Models - SINGLE POLE INBUILT THERMOSTAT (RANGE 0° - 110°F)							
03277902	E4375TRP	03278702	E4375TRPW	120	750	2560	6.25
03278002	E4310TRP	03278802	E4310TRPW		1000	3413	8.33
03278102	E4315TRP	03278902	E4315TRPW		1500	5120	12.5
03278202	F4320TRP	03279002	F4320TRPW	208	2000	6826	9.6
03278302	HF4375TRP	03279102	HF4375TRPW	240/208	750 / 562	2560 / 1920	3.1 / 2.7
03278402	HF4310TRP	03279202	HF4310TRPW		1000 / 750	3413 / 2560	4.2 / 3.6
03278502	HF4315TRP	03279302	HF4315TRPW		1500 / 1125	5120 / 3840	6.3 / 5.4
03278602	HF4320TRP	03279402	HF4320TRPW		2000 / 1500	6826 / 5120	8.3 / 7.2
NO IN-BUILT THERMOSTAT							
03279502	E4375RP	03280302	E4375RPW	120	750	2560	6.25
03279602	E4310RP	03280402	E4310RPW		1000	3413	8.33
03279702	E4315RP	03280502	E4315RPW		1500	5120	12.5
03279802	F4320RP	03280602	F4320RPW	208	2000	6826	9.6
03279902	HF4375RP	03280702	HF4375RPW	240/208	750 / 562	2560 / 1920	3.1 / 2.7
03280002	HF4310RP	03280802	HF4310RPW		1000 / 750	3413 / 2560	4.2 / 3.6
03280102	HF4315RP	03280902	HF4315RPW		1500 / 1125	5120 / 3840	6.3 / 5.4
03280202	HF4320RP	03281002	HF4320RPW		2000 / 1500	6826 / 5120	8.3 / 7.2

Accessories

IVORY		WHITE		ACCESSORY OPTIONS	WT. (LBS)
MFG CATALOG NUMBER	MFG MODEL NUMBER	MFG CATALOG NUMBER	MFG MODEL NUMBER		
03276502	4300EX8	03284502	4300EX8W	1" SEMI RECESSING EXTENDER	2
03276602	4300EX16	03284602	4300EX16W	2" SEMI RECESSING EXTENDER	3
03276702	4300EX32	03284702	4300EX32W	4" SURFACE MOUNTING FRAME	4
03276802	4300P	03284802	4300PW	WALL PLATE ADAPTOR (OD 21.5" x 12.25")	1
FIELD INSTALLED THERMOSTATS		03297702	43T	SINGLE POLE THERMOSTAT 0° - 110° F	1
		03297802	43T2	DOUBLE POLE THERMOSTAT 0° - 110° F	1

4800 Series Register Style Fan Forced Wall Heater - With Wall Box

⚠ **WARNING:** This product can expose you to chemicals including nickel which is known to the State of California to cause cancer, and chromium, which is known to the State of California to cause birth defects and/or reproductive harm. For more information go to www.P65Warnings.ca.gov.

Intertek

Features

- Units have white powder coat finish
- Powder coated 20 gauge steel front
- Manual reset thermal limit
- Finned tubular steel element
- Propeller style fan blade - 2200 RPM / 70 CFM.
- Rough in dimensions: 14 ½" Wide x 7 ⅛" High x 3 ½" Deep
- Grill dimensions: 16 ¾" Wide x 7 ⅝" High
- Unit not approved for ceiling mount applications
- Left discharge only. / Weight: 9lbs
- Made in U.S.A.

Standard Models

MFG CATALOG NUMBER	MFG MODEL NUMBER	VOLTS	WATTS	MAX BTUs	AMPS
DOUBLE POLE IN-BUILT THERMOSTAT (40º - 130ºF TEMPERATURE RANGE)					
03281502	F4820T2RPW	208	2000	6826	9.6
03281602	HF4875T2RPW	240/208	750 / 562	2560 / 1920	3.1 / 2.7
03281702	HF4810T2RPW		1000 / 750	3413 / 2560	4.2 / 3.6
03281802	HF4815T2RPW		1500 / 1125	5120 / 3840	6.3 / 5.4
03281902	HF4820T2RPW		2000 / 1500	6826 / 5120	8.3 / 7.2
SINGLE POLE IN-BUILT THERMOSTAT (0º - 110ºF TEMPERATURE RANGE)					
03282002	E4875TRPW	120	750	2560	6.25
03282102	E4810TRPW		1000	3413	8.33
03282202	E4815TRPW		1500	5120	12.5
03282302	F4820TRPW	208	2000	6826	9.6
NO IN-BUILT THERMOSTAT					
03282402	E4875RPW	120	750	2560	6.25
03282502	E4810RPW		1000	3413	8.33
03282602	E4815RPW		1500	5120	12.5
03282702	F4820RPW	208	2000	6826	9.6
03282802	HF4875RPW	240/208	750 / 562	2560 / 1920	3.1 / 2.7
03282902	HF4810RPW		1000 / 750	3413 / 2560	4.2 / 3.6
03283002	HF4815RPW		1500 / 1125	5120 / 3840	6.3 / 5.4
03283102	HF4820RPW		2000 / 1500	6826 / 5120	8.3 / 7.2

Accessories

MFG CATALOG NUMBER	MFG MODEL NUMBER	DESCRIPTION	WT. (LBS)
03284502	4300EX8W	1" SEMI RECESSING EXTENDER	2
03284602	4300EX16W	2" SEMI RECESSING EXTENDER	3
03284702	4300EX32W	4" SURFACE MOUNTING FRAME	4
03284802	4300PW	WALL PLATE ADAPTOR (OD 21.5" x 12.25")	1
03297702	43T	SINGLE POLE THERMOSTAT 0º - 110º F	1
03297902	48T2	DOUBLE POLE THERMOSTAT 40º - 130º F	1

All Draft Barrier Heaters, unless otherwise noted, are build to order items. Consult factory for lead times. Additional charges may be incurred if changes are made after production has begun - consult factory.

Electric Draft Barrier Features

- "UNI-LOCK" construction allows snap-fit, 2 piece installation
- Heavy Gauge Aluminum Extruded enclosures, 6063 heat treated to T-5 hardness
- DBT/DBF & RDBT-PD-12 gauge front & back
- ASHDB Series is 16 gauge Steel Front with 18 Steel gauge back
- ¼" pencil proof discharge louvers
- Thermal protection by full length linear limits
- Multiple heaters, factory wired on same back plate, available in up to 10' lengths
- Totally enclosed junction boxes
- Custom colors and finishes available (See Chart)
- Enclosures available for hydronic heating coils (consult factory for more information)

How To Designate A Model

DIGIT	EXAMPLE	MFG MODEL NUMBER DESIGNATION - "ASI" DRAFT BARRIER
DIGIT 1=	DBT	Series Model Number (DBT/DBF, etc.)
DIGIT 2=	PD	Use if Pedestals are Required* 2' to 5' Heaters require 2 pedestals 6' to 8' Heaters require 3 pedestals 9' & 10' Heaters require 4 pedestals
DIGIT 3=	4	Heated Length of Heater (for extended enclosure, specify amount of required enclosure on order write up, IE: 4' Heated length with 2'6" of extended enclosure
DIGIT 4=	250	Wattage per Linera foot (may not exceed allowable wattages on specific models, refer to catalog page to verify maximum WPF)
DIGIT 5=	ITS (etc)	Control Options: Refer to List Price chart for available options (Verify on each model which options may be factory installed)

COMPLETED EXAMPLE: DBT-PD-4250-ITS
NOTE: SEE 9100 AND 9300 SERIES PAGES FOR THEIR MODEL CONFIGURATION.

NOTE:
- Extended enclosures and Blank Sections are NOT punched. When a Control Section is specified, ALWAYS allow for an extended enclosure to compensate for the 6" or 12" length of the Section required.
- Note on order when finished backs are required and add list adder to model list.
- **Total heater amperage must not exceed the 25-Amp rating of the high temperature limit at any voltage or wattage. This applies to all Sill Line Model Series.**

Voltage & Wattage Specification

VOLTAGE	STANDARD WATTAGES PER FOOT	HEATER LENGTHS
120-277	100, 125, 150, 165, 187, 200, 250*, 300, 333*, 375*	2' through 10'

*Units with Extended Enclosures may require more Pedestals than standard length, must verify length of heater after extended enclosures for total amount of pedestals. NOTE: All bottom inlet units must be mounted a minimum of 3 inches above finished floor.

All dual element ASHDB models have single phase elements.

Control Options

SUFFIX DESIGNATION	DESCRIPTION
CS 6	6" control section / will contain up to 2 control options
CS 12	12" control section / will contain up to 3 control options
ITS	Single Pole, 25 Amp integral thermostat, 120,208,240 & 277 Volts
ITD	Double Pole, 25 Amp integral thermostat, 120,208,240 & 277 Volts
IDS	Double Pole Disconnect, 20 Amp, 120, 208, 240 & 277 Volts
IDS 30	30 Amp disconnect (9300 Series)
IDS 40	40 Amp disconnect (9300 Series)
LVTR	Low voltage controls (trans & relay) (9300 Series)
PR 120-277/24	Power Relay, 18 Amp tested, Must specify coil voltage Single Pole
PR 120-277/120	
PR 120-277/240	
ATR*	Single Pole, rated 25 Amps, 120 to 240 Volts, Contacts rated up to 277 Volts (must specify) Coils are 24 Volt; 24 Volt transformer

***Not suitable for International use**

Note: Please refer to each model to verify how many controls may be integrally mounted, Control sections will add length to the heater. Must use control section with PR 240/24, PR 208/24, 208/208 and ATR

Note: If using line voltage thermostat on single phase heaters you cannot exceed 25 Amps due to Amp rating of thermostat. 347, 480, and 600V models can use up to 30 Amps with in-built thermostat.

⚠ **WARNING:** This product can expose you to chemicals including nickel which is known to the State of California to cause cancer, and chromium, which is known to the State of California to cause birth defects and/or reproductive harm. For more information go to www.P65Warnings.ca.gov.

CUSTOM PAINT COLORS
Durable Powder Coat Paint Finish
Bankers Bronze - standard color Eggshell White Black Gray Beige Bronze Anodized* *simulated powder coat finish
Special Colors (5 lb. Increment)
ANODIZING*
* 204R1 Clear; 313R1 Bronze and Black

9100 Series - Radius Front Draft Barrier Heater

ETL listed up to 250 Watts / foot for industrial, commercial, or residential applications

Intertek

⚠ **WARNING:** This product can expose you to chemicals including nickel which is known to the State of California to cause cancer, and chromium, which is known to the State of California to cause birth defects and/or reproductive harm. For more information go to www.P65Warnings.ca.gov.

Features

- Standard color: Bankers Bronze
- "UNI-LOCK" construction allows snap-fit, 2 piece installation
- Units can be controlled by optional In-Built thermostat or can be constructed with relays and / or transformers for low voltage or line voltage wall thermostats
- Thermal protection by full length manual reset linear limits
- Optional duplex receptacle section
- Wiring junction boxes on each end of the unit
- Custom colors and finishes available (consult factory)
- Limited by max Amp draw of 25 Amps (with no controls)
- Additional charges may be incurred if changes are made after production has begun - consult factory
- Made in U.S.A.

HOW TO DESIGNATE A MODEL:

E 91 96 250 ITS PD

Element Volts	Model Series	Heater Length (inches)	Watts Per Foot	Control Options	Factory Installed Accessories
E = 120 F = 208 G = 277 H = 240	91	28, 36, 48, 60, 72, 84, 96, 108, or 120	100, 125, 150, 165, 187, 200, or 250	Refer to Draft Barrier Heaters pages	PD = Pedestal DR = Receptacle WM = Screen

Note: For control option pricing see page 52

Product Description

TECHNICAL INFORMATION	
Air Intake	Bottom
Air Discharge	Top
Min Mounting Height	3"
Max Watts / Foot	250
Max Allowable Amps	25 Amps (16 Amps with disconnect)
Voltage / Phase	120V/208V/240V/277V Single Phase

TECHNICAL INFORMATION	
Height	4 ½"
Depth	3 ⅛"
Length	28" to 120" in 1' increments
Cabinet Material	Aluminum
Material Gauge	14
Optional Controls That Can Be Built Into Unit	Thermostat and Disconnect Switch (Control Section Required for Relays)

Standard Models

MFG MODEL		UNIT LENGTH
Heater	9128	28"
	9136	36"
	9148	48"
	9160	60"
	9172	72"
	9184	84"
	9196	96"
	91108	108"
	91120	120"

MFG MODEL		UNIT LENGTH
Blank Section	91BS012	12"
	91BS024	24"
	91BS036	36"
	91BS048	48"
	91BS060	60"
	91BS072	72"
	91BS084	84"
	91BS096	96"
	91BS108	108"
	91BS120	120"

Factory Installed Accessories

SUFFIX	DESCRIPTION
DR	Duplex Receptacle in 4" Extended Enclosure (not available with 120" heater)
PD	28" through 60" - 2 Required
	72" through 96" - 3 Required
	108" through 120" - 4 Required
WM	¼" wire mesh under grill

Field Installed Accessories

MFG MODEL	DESCRIPTION
9100IC	Inside Corner Section 90° or 135°
9100OC	Outside Corner Section 90° or 135°
9100EC	Right or Left End Cap
9100SP	Splice Plate

Note: All models are suitable for International use
Note: Extended enclosure per foot is 34 dollars

Product Specifications

CABINET

9100 Series shall be constructed of 14 gauge extruded 6063 Aluminum heat treated to T5 hardness. The uni-lock construction shall allow easy installation and access to back plate for wiring. The snap-fit front cover makes installation and service very simple. Custom factory enclosures to 1/16 inch increments are built for exact wall to wall fit up to 10 foot enclosure lengths. The 14 gauge back plate will have electrical knockouts for incoming power on each end adjacent to junction box. Pedestal mounted units will have incoming power connection through the pedestal on bottom of unit and will have smooth back for optional finished back. The die punched front cover will have no screw heads or fasteners.

ELEMENTS

High mass sheathed element construction with Nickel-Chromium resistance wire embedded in compacted efficient die-electric to ensure proper heat transfer. Aluminum fins mechanically bonded to stainless steel tube allows for increased surface area and even heat transfer.

LIMIT CONTROLS

Manual reset hydraulic thermal overload covers full length of heating element and shuts down heater when safe operating temperatures are exceeded.

WIRING

Wiring shall be in either end of the enclosure. Wiring can be in the junction box or optional control section if additional controls are needed. Pedestal mounted units shall have 1 ¼” hole through the pedestal and in the bottom of the enclosure for incoming power wiring. All heaters have a factory supplied built in raceway for wiring from either end of the heater or for wiring of continuous heater connections.

CONTROLS

Optional controls include single or double pole thermostat and disconnect switch that are factory wired in enclosed junction box on each end of heater enclosure. Relay, transformer relay and duplex receptacle options shall be mounted in extended length control section. **Control section will add to heater enclosure length**. The control section for the duplex receptacle will add 4” to enclosure length. The control section for other optional components or combinations of components will have two options (6” or 12”) depending on controls required.

APPLICATION

The 9100 series is ETL listed for commercial, industrial or residential applications on all units up to 250 Watts per foot.

Product Dimensions

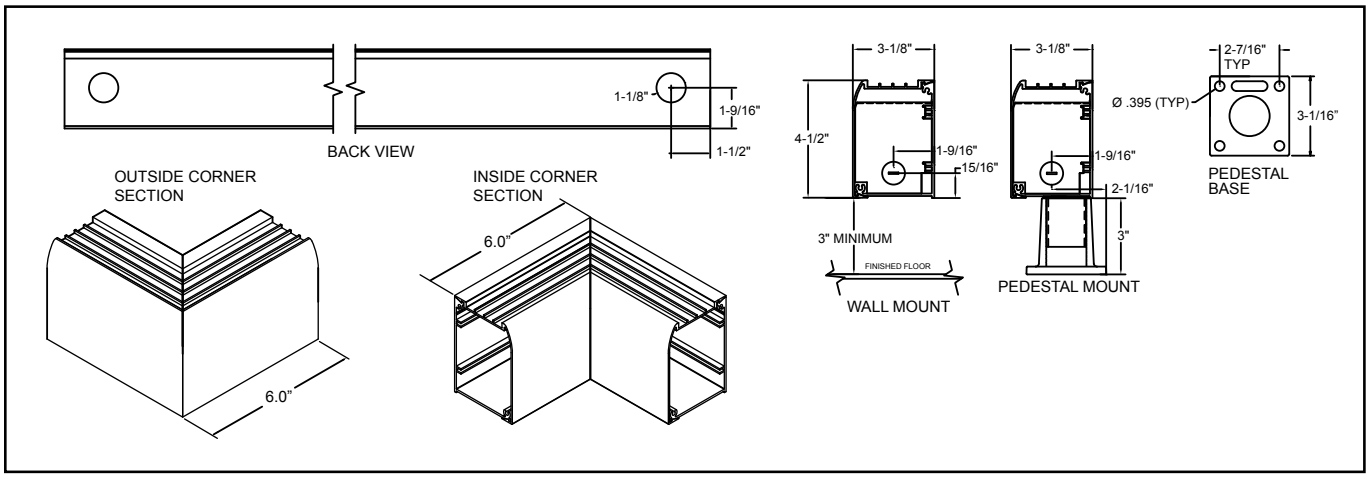

9300 Series - Radius Front Draft Barrier Heater

ETL listed up to 750 Watts/foot for industrial or commercial applications.

WARNING: This product can expose you to chemicals including nickel which is known to the State of California to cause cancer, and chromium, which is known to the State of California to cause birth defects and/or reproductive harm. For more information go to www.P65Warnings.ca.gov.

Not suitable for residential applications.

Features

- LEED and green compliance, 1 and 3 phase applications
- Industrial or commercial applications
- Standard color: Bankers Bronze (powder coated)
- Also available in other standard TPI colors and custom colors for an additional charge
- Uni-lock construction for snap fit 2 piece installation
- Temperature control can be in-built or wall mounted
- Thermal protection by full length manual reset linear limits
- Optional accessories include: duplex receptacle, and inside or outside corner sections for wall to wall custom fit.
- Additional charges may be incurred if changes are made after production has begun - consult factory.
- Made in U.S.A.

HOW TO DESIGNATE A MODEL:

F 93 96 B 561 3 ITS PD

Element Volts	Model Series	Heater Length (inches)	Inlet	Watts Per Foot	# of Elements	Control Options	Factory Installed Accessories
F = 208 H = 240 G = 277 L = 347 P1 = 480 U1 = 600 (Single Phase) J = 208 K = 240 P3 = 480 U3 = 600 (Three Phase)	93	28, 36, 48, 60, 72, 84, 96, 108, or 120	B = Bottom F = Front	1 Element: 100, 125, 150, 165, 187, 200, or 250 2 Elements: 200, 250, 300, 330, 374, 500, or 500 3 Elements: 300, 375, 450, 495, 561, 600, or 750	1, 2, or 3	Refer to Draft Barrier Heaters pages	PD = Pedestal DR = Receptacle WM = Screen

Note: 480V single phase units minimum 36” heated length; 600V single phase units minimum 48” heated length
347-480-600 single phase and all three phase units are built with low voltage option factory installed

Note: For control option pricing see page 52.

Product Description

TECHNICAL INFORMATION	
Air Intake	Bottom / Front
Air Discharge	Top
Min Mounting Height	3” for bottom intake / 0” for front intake
Max Watts / Foot	750
Max Allowable Amps	25 without relay, 40 with relay
Voltage / Phase	208V/240V/277V/347V,480V,600V Single Phase
	208V,240V,480V,600V Three Phase

TECHNICAL INFORMATION	
Height	7.5”
Depth	6.15”
Length	28” to 120” in 1’ increments
Cabinet Material Material Gauge	Aluminum
	12
Optional Controls That Can Be Built Into Unit	Thermostat, Disconnect Switch, Transformer (Some configurations may require control section)

Standard Models

MFG MODEL		UNIT LENGTH
Heater	9328	28”
	9336	36”
	9348	48”
	9360	60”
	9372	72”
	9384	84”
	9396	96”
	93108	108”
	93120	120”

MFG MODEL		UNIT LENGTH
Blank Section	93BS012	12”
	93BS024	24”
	93BS036	36”
	93BS048	48”
	93BS060	60”
	93BS072	72”
	93BS084	84”
	93BS096	96”
	93BS108	108”
	93BS120	120”

Note: All models are suitable for International use

Factory Installed Accessories

SUFFIX	DESCRIPTION
DR	Duplex Receptacle in 4.5” Extended Enclosure (not available with 120” heater)
PD	28” through 60” - 2 Required
	72” through 96” - 3 Required
	108” through 120” - 4 Required
WM	¼” wire mesh under grill
IDS30	30 Amp/240V Disconnect Switch
IDS40	40 Amp/600V Disconnect Switch

Note: If using line voltage thermostat on 1 phase heaters, you cannot exceed 25 Amps due to Amp rating of thermostat. 347, 480, and 600V can use 30 Amps with in-built thermostat.

Field Installed Accessories

MFG MODEL	DESCRIPTION
9300IC	Inside Corner Section 90° or 135°
9300OC	Outside Corner Section 90° or 135°
9300EC	Right or Left End Cap
9300SP	Splice Plate

Product Specifications

CABINET

9300 Series shall be constructed of 12 gauge extruded 6063 Aluminum heat treated to T5 hardness. The uni-lock construction shall allow easy installation and access to back plate for wiring. The snap-fit front cover makes installation and service very simple. Custom factory enclosures to 1⁄16 inch increments are built for exact wall to wall fit up to 10 foot enclosure lengths. The 12 gauge back plate will have electrical knockouts for incoming power on each end adjacent to junction box. Pedestal mounted units will have incoming power connection through the pedestal on bottom of unit and will have smooth back for optional finished back. The die punched front cover will have no screw heads or fasteners.

ELEMENTS

High mass sheathed element construction with Nickel-Chromium resistance wire embedded in compacted efficient die-electric to ensure proper heat transfer. Aluminum fins mechanically bonded to stainless steel tube allows for increased surface area and even heat transfer.

LIMIT CONTROLS

Manual reset hydraulic thermal overload covers full length of heating element and shuts down heater when safe operating temperatures are exceeded.

WIRING

Wiring shall be in either end of the enclosure. Wiring can be in the junction box or optional control section if additional controls are needed. Pedestal mounted units shall have 1 ¼” hole through the pedestal and in the bottom of the enclosure for incoming power wiring. All heaters have a factory supplied built in raceway for wiring from either end of the heater or for wiring of continuous heater connections.

CONTROLS

Optional controls include single or double pole thermostat and disconnect switch that are factory wired in enclosed junction box on each end of heater enclosure. **If necessary, control section will add to heater enclosure length**. The control section for other optional components or combinations of components will have two options (6” or 12”) depending on controls required.

APPLICATION

The 9300 series is ETL listed for commercial or industrial applications on all units up to 750 Watts per foot. 3 Phase units have a minimum of 300 Watts per foot. 3 Phase units require three elements.

Product Dimensions

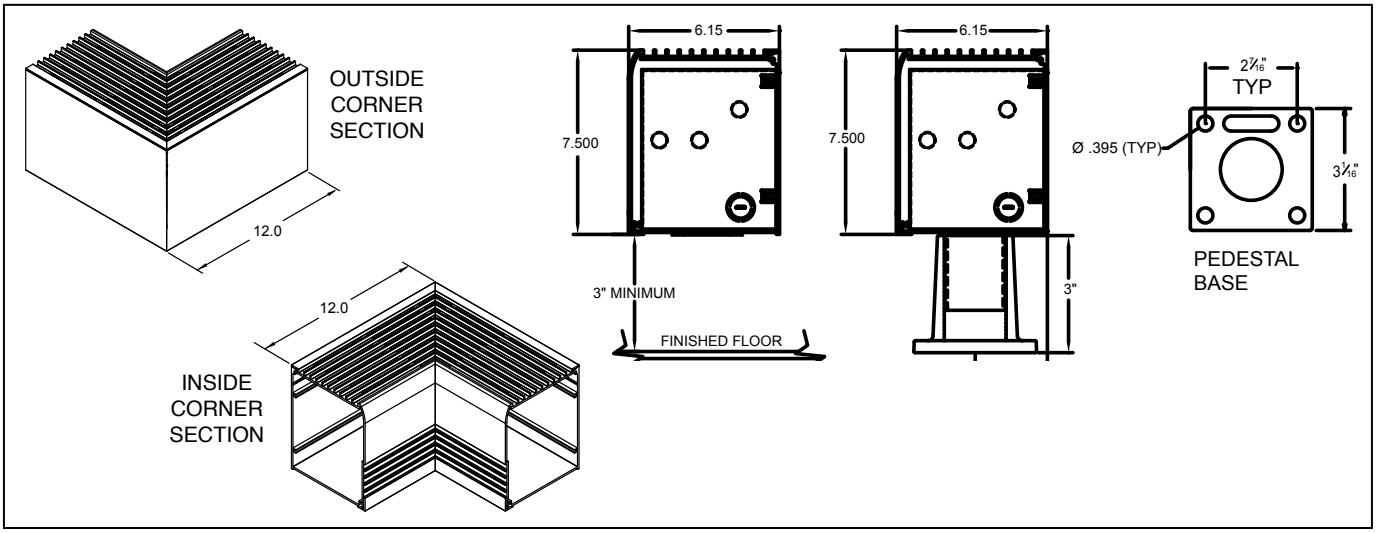

DBF/DBT Series

DBF Floor Mount Model-
250 WPF Max.

DBT Wall Mount Model-
300 WPF Max.

Cabinet Dimensions:
3 ½" x 6" x 10' Maximum Length
Made in U.S.A.

⚠WARNING: This product can expose you to chemicals including nickel which is known to the State of California to cause cancer, and chromium, which is known to the State of California to cause birth defects and/or reproductive harm. For more information go to www.P65Warnings.ca.gov.

Not suitable for residential applications.
Built to order: consult factory for lead time.

MFG MODEL NUMBER	LENGTH	Color Availablility (heater & finished back)
DBF-2/DBT-2	2'	Painted Bronze
DBF-3/DBT-3	3'	
DBF-4/DBT-4	4'	
DBF-5/DBT-5	5'	
DBF-6/DBT-6	6'	
DBF-7/DBT-7	7'	
DBF-8/DBT-8	8'	
DBF-9/DBT-9	9'	
DBF-10/DBT-10	10'	
Extended Enclosure (no color on finished back)		
Blank Sections		
DBF/DBT-100BS	1'	
DBF/DBT-200BS	2'	
DBF/DBT-300BS	3'	
DBF/DBT-400BS	4'	
DBF/DBT-500BS	5'	
DBF/DBT-600BS	6'	
DBF/DBT-700BS	7'	
DBF/DBT-800BS	8'	
DBF/DBT-900BS	9'	
DBF/DBT-1000BS	10'	

Accessories	Color Availability
DBF/DBT IC / Inside Corner Section	Painted Bronze
90 - 180 Degrees	
DBF/DBT OC / Outside Corner Section	
180 - 270 Degrees - 6" longest side	
DBF/DBT ECR / Right Hand End Cap	
DBF/DBT ECL / Left Hand End Cap	
DBF/DBT IECR / Inside Fitting Right End Cap	
DBF/DBT IECL / Inside Fitting Left End Cap	
DBF/DBT WT / 2"- 6" Wall Trim	
DBF/DBT SP / 1 ½" Splice Plate	
DBF/DBT MF / Mullion Front up to 1'	
DBF/DBT IF / Inside Filler up to 1'	
¾" Conduit Raceway (standard is ½")	
Mesh / ¼" Wire Mesh under Grill	
Pedestals - specify 2" or 3"	
See Chart for required amount per Heater	

NOTE: DBF/DBT Series will permit a Thermostat mounted on one side and a Disconnect on the other side, more or other controls require a 6" or 12" control section. Typically, thermostats are mounted on left side of heater. Control Section will add to length of heater.

RDBT Series

RDBT

Cabinet Dimensions:
7" x 6" x 10' Maximum Length
Made in U.S.A.

⚠WARNING: This product can expose you to chemicals including nickel which is known to the State of California to cause cancer, and chromium, which is known to the State of California to cause birth defects and/or reproductive harm. For more information go to www.P65Warnings.ca.gov.

Not suitable for residential applications. 300 Watts Per Foot Maximum. Pedestals included with unit. Rounded enclosure with flat top discharge. Special Build: consult factory for lead time.

MFG MODEL NUMBER	LENGTH	COLOR AVAILABILITY
RDBT-PD-2	2'	Painted Bronze
RDBT-PD-3	3'	
RDBT-PD-4	4'	
RDBT-PD-5	5'	
RDBT-PD-6	6'	
RDBT-PD-7	7'	
RDBT-PD-8	8'	
RDBT-PD-9	9'	
RDBT-PD-10	10'	
Extended Enclosure		
BLANK SECTIONS		
RDBT-PD-100BS	1'	
RDBT-PD-200BS	2'	
RDBT-PD-300BS	3'	
RDBT-PD-400BS	4'	
RDBT-PD-500BS	5'	
RDBT-PD-600BS	6'	
RDBT-PD-700BS	7'	
RDBT-PD-800BS	8'	
RDBT-PD-900BS	9'	
RDBT-PD-1000BS	10'	

ACCESSORIES	COLOR AVAILABILITY
RDBT-PDIC / Inside Corner Section 90 - 180 Degrees	Painted Bronze
RDBT-PDOC / Outside Corner Section 180 - 270 Degrees - 6" longest side	
RDBT-PDIECR/Inside Fitting Right End Cap RDBT-PDIECL/Inside Fitting Left End Cap	
¾" Conduit Raceway (standard is ½")	
Mesh - ¼" Wire Mesh under Grill	

NOTE: RDBT-PD Series will permit a Thermostat mounted on one side and a Disconnect on the other side. More or other controls require a 6" or 12" control section. Typically, Thermostats are mounted on the left side of heater. Control Sections will add to length of heater.

Cabinet Dimensions: 5 ½" x 8" thru 20" x 10'
Maximum Length. Cannot be Anodized
Made in U.S.A.

⚠ **WARNING:** This product can expose you to chemicals including nickel which is known to the State of California to cause cancer, and chromium, which is known to the State of California to cause birth defects and/or reproductive harm. For more information go to www.P65Warnings.ca.gov.

Intertek

Not suitable for residential applications. 500 Watts per foot maximum.
16 gauge Steel enclosure, 18 gauge backplate. Heights may vary from 8" up to 20". Bottom Intake / Top Discharge. Special build - consult factory for lead time.

MFG MODEL / LENGTH	WATTS/FT.	Color Availability (heater & finished back)
ASHDB-2 2'	to 250	Painted Bronze
	251-500	
ASHDB-3 3'	to 250	
	251-500	
ASHDB-4 4'	to 250	
	251-500	
ASHDB-5 5'	to 250	
	251-500	
ASHDB-6 6'	to 250	
	251-500	
ASHDB-7 7'	to 250	
	251-500	
ASHDB-8 8'	to 250	
	251-500	
ASHDB-9 9'	to 250	
	251-500	
ASHDB-10 10'	to 250	
	251-500	
Extended Enclosure (no color on finished back)		
Blank Sections		
ASHDB-8/20-100BS 1'		
ASHDB-8/20-200BS 2'		
ASHDB-8/20-300BS 3'		
ASHDB-8/20-400BS 4'		
ASHDB-8/20-500BS 5'		
ASHDB-8/20-600BS 6'		
ASHDB-8/20-700BS 7'		
ASHDB-8/20-800BS 8'		
ASHDB-8/20-900BS 9'		
ASHDB-8/20-1000BS 10'		

Accessories	Color Availability
ASHDB IC / Inside Corner Section 90 - 180 Degrees	Painted Bronze
ASHDB OC / Outside Corner Section 180 - 270 Degrees - 6" longest side	
ASHDB ECR / Right End Cap ASHDB ECL / Left End Cap	
ASHDB SP / 1 ½" Splice Plate	
ASHDB WT / 2" - 6" Wall Trim	
¾" Conduit Raceway (standard is ½")	
Mesh / ¼" Wire Mesh under Grill	
Pedestals - Specify 2" or 3" See Chart for required amount per Heater	

NOTE: ASHDB Series will permit a Thermostat mounted on one side and a Disconnect on the other side, more or other controls require a 6" or 12" control section. Typically, Thermostats are mounted on left side of heater. Control Section will add to length of heater.

Intertek

⚠ **WARNING:** This product can expose you to chemicals including nickel which is known to the State of California to cause cancer, and chromium, which is known to the State of California to cause birth defects and/or reproductive harm. For more information go to www.P65Warnings.ca.gov.

Features

- Heavy-duty bar grate. Constructed of solid extruded aluminum bars with clear anodized finish
- Stainless steel element with aluminum fins
- Limit Control - Automatic reset capillary extending full length of heated section.
- Adjustable levelers to allow positioning flush with finished floor - accessible from the top of the heater
- Large wiring compartments with 3/4 inch conduit wireway allows wiring from either end
- Control sections and blank sections available
- Knockouts provided on ends and sides to allow inter-connection of heaters and accessories

Product Description

The 9900 series heaters are fixed location convection heaters intended for commercial / industrial use. The 9900 Series can be fully recessed into the floor with 'zero' clearance to combustibles or surface mounted and wrapped with a custom built enclosure on the sides and ends with 'zero' clearance. Continuous runs can be accomplished by installing heaters end to end. Blank Sections and Control Sections are available. All electrical components are factory assembled.

HOW TO DESIGNATE A MODEL:

F 99 48 02 200

Element Volts	Model Series	Heater Length (inches)	Cabinet Width	Watts Per Foot
F-208 G-277 H-240 J-208 3PH K-240 3PH P1-480 P3-480 3PH	99	28, 36, 40, 48, 60, 72, 84, 96, 108, or 120	01 = 7 ½" 02 = 9 ¼" 03 = 10 ¾"	100, 125, 150, 165, 187, 200, or 250

Product Dimensions

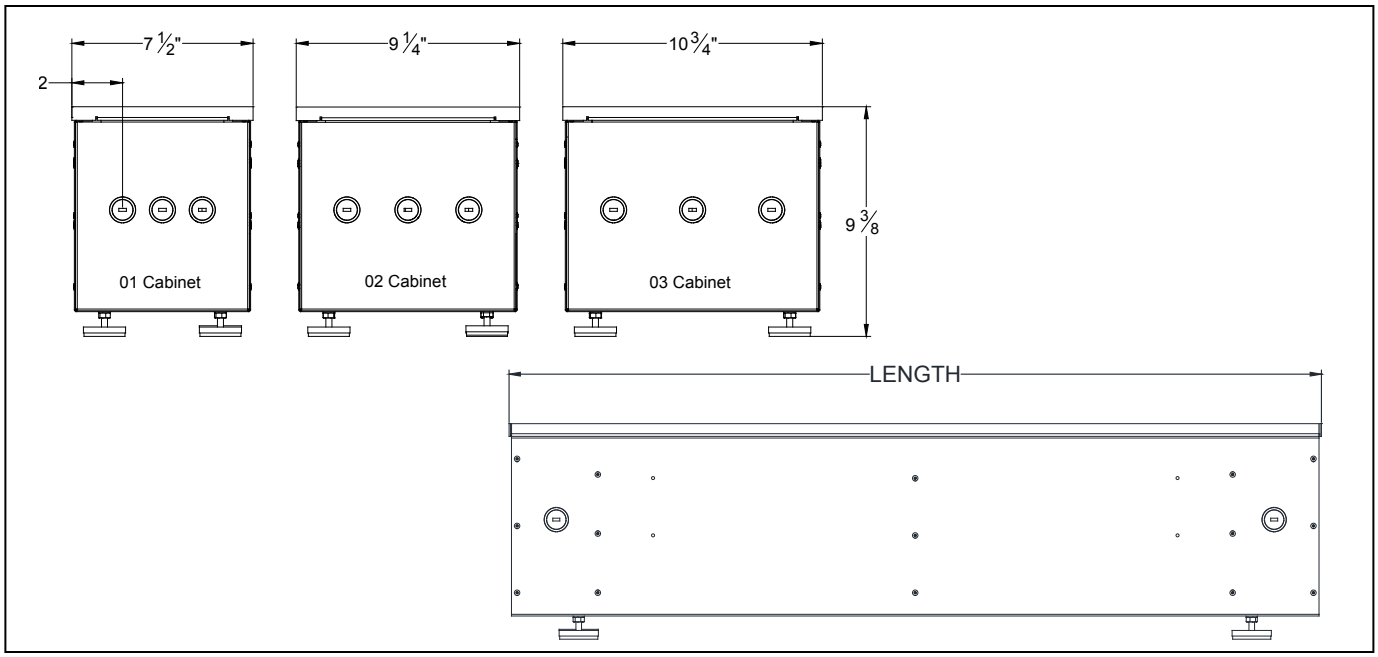

Product Specifications

CABINET

01 Cabinet Width: 1 element, available with 150 or 200 watts/foot maximum with the exception of the 28” model, maximum wattage for the 28”* unit is 300 watts. single phase voltages only

02 Cabinet Width: 2 elements, available with 200 or 300 watts/foot maximum with the exception of the 28” model, maximum wattage for the 28”* unit is 400 watts. single phase voltages only.

03 Cabinet Width: 3 elements, available 300 watts/foot maximum with the exception of the 28” model, maximum wattage for the 28”* unit is 400 watts. single and three phase voltages

Note: Design limitations affect certain 28 inch models. Contact factory for availability.

CONTROLS

Relays and transformers available for all voltages. ATR available for 208,240 and 277 single phase only.

Standard Models

MFG CATALOG NUMBER	MFG MODEL NUMBER	VOLTS	LENGTH	WATTS	AMPS
05666402	F9928-01-86	208	28”	200	.96
05667302	F9928-01-129		28”	300	1.44
05680102	F9928-03-129		28”	300	1.44
05674202	F9928-02-172		28”	400	1.92
05681002	F9928-03-172		28”	400	1.92
05668202	H9928-01-86	240	28”	200	.83
05669102	H9928-01-129		28”	300	1.25
05681902	H9928-03-129		28”	300	1.25
05675902	H9928-02-172		28”	400	1.67
05682802	H9928-03-172		28”	400	1.67
05670002	G9928-01-86	277	28”	200	.72
05670902	G9928-01-129		28”	600	2.17
05677602	G9928-02-172		28”	400	1.44
05684502	G9928-03-172		28”	400	1.44
05666502	F9936-01-150	208	36”	450	2.16
05667402	F9936-01-200		36”	600	2.88
05673402	F9936-02-200		36”	600	2.88
05680202	F9936-03-200		36”	600	2.88
05674302	F9936-02-300		36”	900	4.33
05681102	F9936-03-300		36”	900	4.33
05668302	H9936-01-150	240	36”	450	1.88
05669202	H9936-01-200		36”	600	2.5
05675102	H9936-02-200		36”	600	2.50
05682002	H9936-03-200		36”	600	2.50
05676002	H9936-02-300		36”	900	3.75
05682902	H9936-03-300		36”	900	3.75
05670102	G9936-01-150	277	36”	450	1.62
05671002	G9936-01-200		36”	600	2.17
05676802	G9936-02-200		36”	600	2.17
05683702	G9936-03-200		36”	600	2.16
05677702	G9936-02-300		36”	900	3.25
05684602	G9936-03-300		36”	900	3.25
05671802	P9936-01-150	480	36”	450	0.94
05672602	P9936-01-200		36”	600	1.25
05678502	P9936-02-200		36”	600	1.25
05679302	P9936-02-300		36”	900	1.88
05685402	P9936-03-300		36”	900	1.875
05666602	F9948-01-150	208	48”	600	2.88
05667502	F9948-01-200		48”	800	3.85
05673502	F9948-02-200		48”	800	3.85

MFG CATALOG NUMBER	MFG MODEL NUMBER	VOLTS	LENGTH	WATTS	AMPS
05680302	F9948-03-200	208	48”	800	3.85
05674402	F9948-02-300		48”	1200	5.77
05681202	F9948-03-300		48”	1200	5.77
05668402	H9948-01-150	240	48”	600	2.5
05669302	H9948-01-200		48”	800	3.33
05675202	H9948-02-200		48”	800	3.33
05682102	H9948-03-200		48”	800	3.33
05676102	H9948-02-300		48”	1200	5.00
05683002	H9948-03-300		48”	1200	5.00
05670202	G9948-01-150	277	48”	600	2.17
05671102	G9948-01-200		48”	800	2.89
05676902	G9948-02-200		48”	800	2.89
05683802	G9948-03-200		48”	800	2.88
05677802	G9948-02-300		48”	1200	4.33
05684702	G9948-03-300		48”	1200	4.33
05671902	P9948-01-150	480	48”	600	1.25
05672702	P9948-01-200		48”	800	1.67
05678602	P9948-02-200		48”	800	1.67
05679402	P9948-02-300		48”	1200	2.50
05685502	P9948-03-300		48”	1200	2.50
05666702	F9960-01-150	208	60”	750	3.6
05667602	F9960-01-200		60”	1000	4.81
05673602	F9960-02-200		60”	1000	4.81
05680402	F9960-03-200		60”	1000	4.81
05674502	F9960-02-300		60”	1500	7.21
05681302	F9960-03-300		60”	1500	7.21
05668502	H9960-01-150	240	60”	750	3.13
05669402	H9960-01-200		60”	1000	4.17
05675302	H9960-02-200		60”	1000	4.17
05682202	H9960-03-200		60”	1000	4.17
05676202	H9960-02-300		60”	1500	6.25
05683102	H9960-03-300		60”	1500	6.25
05670302	G9960-01-150	277	60”	750	2.70
05671202	G9960-01-200		60”	1000	3.61
05677002	G9960-02-200		60”	1000	3.61
05683902	G9960-03-200		60”	1000	3.61
05677902	G9960-02-300		60”	1500	5.42
05684802	G9960-03-300		60”	1500	5.42
05672002	P9960-01-150	480	60”	750	1.56
05672802	P9960-01-200		60”	1000	2.08

Standard Models

MFG CATALOG NUMBER	MFG MODEL NUMBER	VOLTS	LENGTH	WATTS	AMPS
05678702	P9960-02-200	480	60”	1000	2.1
05679502	P9960-02-300		60”	1500	3.13
05685602	P9960-03-300		60”	1500	3.13
05666802	F9972-01-150	208	72”	900	4.33
05667702	F9972-01-200		72”	1200	5.77
05673702	F9972-02-200		72”	1200	5.77
05680502	F9972-03-200		72”	1200	5.77
05674602	F9972-02-300		72”	1800	8.65
05681402	F9972-03-300		72”	1800	8.65
05668602	H9972-01-150	240	72”	900	3.75
05669502	H9972-01-200		72”	1200	5.00
05675402	H9972-02-200		72”	1200	5.00
05682302	H9972-03-200		72”	1200	5.00
05676302	H9972-02-300		72”	1800	7.50
05683202	H9972-03-300		72”	1800	7.50
05670402	G9972-01-150	277	72”	900	3.25
05671302	G9972-01-200		72”	1200	4.33
05677102	G9972-02-200		72”	1200	4.33
05684002	G9972-03-200		72”	1200	4.33
05678002	G9972-02-300		72”	1800	6.50
05684902	G9972-03-300		72”	1800	6.5
05672102	P9972-01-150	480	72”	900	1.88
05672902	P9972-01-200		72”	1200	2.50
05678802	P9972-02-200		72”	1200	2.50
05679602	P9972-02-300		72”	1800	3.75
05685702	P9972-03-300		72”	1800	3.75
05666902	F9984-01-150	208	84”	1050	5.05
05667802	F9984-01-200		84”	1400	6.73
05673802	F9984-02-200		84”	1400	6.73
05680602	F9984-03-200		84”	1400	6.73
05674702	F9984-02-300		84”	2100	10.1
05681502	F9984-03-300		84”	2100	10.1
05668702	H9984-01-150	240	84”	1050	4.38
05669602	H9984-01-200		84”	1400	5.83
05675502	H9984-02-200		84”	1400	5.83
05682402	H9984-03-200		84”	1400	5.83
05676402	H9984-02-300		84”	2100	8.75
05683302	H9984-03-300		84”	2100	8.75
05670502	G9984-01-150	277	84”	1050	3.79
05671402	G9984-01-200		84”	1400	5.05
05677202	G9984-02-200		84”	1400	5.05
05684102	G9984-03-200		84”	1400	5.1
05678102	G9984-02-300		84”	2100	7.58
05685002	G9984-03-300		84”	2100	7.58
05672202	P9984-01-150	480	84”	1050	2.19
05673002	P9984-01-200		84”	1400	2.92
05678902	P9984-02-200		84”	1400	2.92
05679702	P9984-02-300		84”	2100	4.4
05685802	P9984-03-300		84”	2100	4.38

MFG CATALOG NUMBER	MFG MODEL NUMBER	VOLTS	LENGTH	WATTS	AMPS
05667002	F9996-01-150	208	96”	1200	5.77
05667902	F9996-01-200		96”	1600	7.69
05673902	F9996-02-200		96”	1600	7.69
05680702	F9996-03-200		96”	1600	7.69
05674802	F9996-02-300		96”	2400	11.54
05681602	F9996-03-300		96”	2400	11.54
05668802	H9996-01-150	240	96”	1200	5.0
05669702	H9996-01-200		96”	1600	6.67
05675602	H9996-02-200		96”	1600	6.67
05682502	H9996-03-200		96”	1600	6.67
05676502	H9996-02-300		96”	2400	10.0
05683402	H9996-03-300		96”	2400	10.0
05670602	G9996-01-150	277	96”	1200	4.33
05671502	G9996-01-200		96”	1600	5.78
05677302	G9996-02-200		96”	1600	5.78
05684202	G9996-03-200		96”	1600	5.78
05678202	G9996-02-300		96”	2400	8.66
05685102	G9996-03-300		96”	2400	8.66
05672302	P9996-01-150	480	96”	1200	2.50
05673102	P9996-01-200		96”	1600	3.33
05679002	P9996-02-200		96”	1600	3.33
05679802	P9996-02-300		96”	2400	5.00
05685902	P9996-03-300		96”	2400	5.00
05667102	F99108-01-150	208	108”	1350	6.49
05668002	F99108-01-200		108”	1800	8.65
05674002	F99108-02-200		108”	1800	8.65
05680802	F99108-03-200		108”	1800	8.65
05674902	F99108-02-300		108”	2700	13.0
05681702	F99108-03-300		108”	2700	13.0
05668902	H99108-01-150	240	108”	1350	5.63
05669802	H99108-01-200		108”	1800	7.50
05675702	H99108-02-200		108”	1800	7.50
05682602	H99108-03-200		108”	1800	7.50
05676602	H99108-02-300		108”	2700	11.25
05683502	H99108-03-300		108”	2700	11.25
05670702	G99108-01-150	277	108”	1350	4.87
05671602	G99108-01-200		108”	1800	6.49
05677402	G99108-02-200		108”	1800	6.50
05684302	G99108-03-200		108”	1800	6.5
05678302	G99108-02-300		108”	2700	9.75
05685202	G99108-03-300		108”	2700	9.75
05672402	P99108-01-150	480	108”	1350	2.81
05673202	P99108-01-200		108”	1800	3.75
05679102	P99108-02-200		108”	1800	3.75
05679902	P99108-02-300		108”	2700	5.63
05686002	P99108-03-300		108”	2700	5.63

Standard Models

MFG CATALOG NUMBER	MFG MODEL NUMBER	VOLTS	LENGTH	WATTS	AMPS
05667202	F99120-01-150	208	120”	1500	7.21
05668102	F99120-01-200		120”	2000	9.62
05674102	F99120-02-200		120”	2000	9.62
05680902	F99120-03-200		120”	2000	9.62
05675002	F99120-02-300		120”	3000	14.42
05681802	F99120-03-300		120”	3000	14.42
05669002	H99120-01-150	240	120”	1500	6.25
05669902	H99120-01-200		120”	2000	8.33
05675802	H99120-02-200		120”	2000	8.33
05682702	H99120-03-200		120”	2000	8.33
05676702	H99120-02-300		120”	3000	12.5
05683602	H99120-03-300		120”	3000	12.5
05670802	G99120-01-150	277	120”	1500	5.42
05671702	G99120-01-200		120”	2000	7.22
05677502	G99120-02-200		120”	2000	7.22
05684402	G99120-03-200		120”	2000	7.22
05678402	G99120-02-300		120”	3000	10.83
05685302	G99120-03-300		120”	3000	10.83
05672502	P99120-01-150	480	120”	1500	3.13
05673302	P99120-01-200		120”	2000	4.17
05679202	P99120-02-200		120”	2000	4.17
05680002	P99120-02-300		120”	3000	6.25
05686102	P99120-03-300		120”	3000	6.3

3 PHASE UNITS					
MFG CATALOG NUMBER	MFG MODEL NUMBER	VOLTS	LENGTH	WATTS	AMPS
05686202	J9928-03-129	208/3	28”	300	0.83
05687102	J9928-03-172		28”	400	1.11
05688002	K9928-03-129	240/3	28”	300	0.72
05688902	K9928-03-172		28”	400	0.96
05690602	P39928-03-172	480/3	28”	400	0.48
05686302	J9936-03-200	208/3	36”	600	1.67
05687202	J9936-03-300		36”	900	2.50
05688102	K9936-03-200	240/3	36”	600	1.45
05689002	K9936-03-300		36”	900	2.2
05689802	P39936-03-200	480/3	36”	600	0.72
05690702	P39936-03-300		36”	900	1.1
05686402	J9948-03-200	208/3	48”	800	2.22
05687302	J9948-03-300		48”	1200	3.33
05688202	K9948-03-200	240/3	48”	800	1.93
05689102	K9948-03-300		48”	1200	2.9
05689902	P39948-03-200	480/3	48”	800	0.96
05690802	P39948-03-300		48”	1200	1.45
05686502	J9960-03-200	208/3	60”	1000	2.78
05687402	J9960-03-300		60”	1500	4.17
05688302	K9960-03-200	240/3	60”	1000	2.4
05689202	K9960-03-300		60”	1500	3.6

3 PHASE UNITS CONTINUED					
MFG CATALOG NUMBER	MFG MODEL NUMBER	VOLTS	LENGTH	WATTS	AMPS
05689902	P39948-03-200	480/3	48”	800	0.96
05690802	P39948-03-300		48”	1200	1.45
05686502	J9960-03-200	208/3	60”	1000	2.78
05687402	J9960-03-300		60”	1500	4.17
05688302	K9960-03-200	240/3	60”	1000	2.4
05689202	K9960-03-300		60”	1500	3.6
05690002	P39960-03-200	480/3	60”	1000	1.2
05690902	P39960-03-300		60”	1500	1.8
05686602	J9972-03-200	208/3	72”	1200	3.33
05687502	J9972-03-300		72”	1800	5.00
05688402	K9972-03-200	240/3	72”	1200	2.9
05689302	K9972-03-300		72”	1800	4.3
05690102	P39972-03-200	480/3	72”	1200	1.45
05691002	P39972-03-300		72”	1800	2.17
05686702	J9984-03-200	208/3	84”	1400	3.89
05687602	J9984-03-300		84”	2100	5.83
05688502	K9984-03-200	240/3	84”	1400	3.4
05689402	K9984-03-300		84”	2100	5.1
05690202	P39984-03-200	480/3	84”	1400	1.69
05691102	P39984-03-300		84”	2100	2.5
05686802	J9996-03-200	208/3	96”	1600	4.44
05687702	J9996-03-300		96”	2400	6.67
05688602	K9996-03-200	240/3	96”	1600	3.9
05689502	K9996-03-300		96”	2400	5.8
05690302	P39996-03-200	480/3	96”	1600	1.93
05691202	P39996-03-300		96”	2400	2.9
05686902	J99108-03-200	208/3	108”	1800	5.00
05687802	J99108-03-300		108”	2700	7.50
05688702	K99108-03-200	240/3	108”	1800	4.3
05689602	K99108-03-300		108”	2700	6.5
05690402	P399108-03-200	480/3	108”	1800	2.17
05691302	P399108-03-300		108”	2700	3.25
05687002	J99120-03-200	208/3	120”	2000	5.56
05687902	J99120-03-300		120”	3000	8.33
05688802	K99120-03-200	240/3	120”	2000	4.8
05689702	K99120-03-300		120”	3000	7.2
05690502	P399120-03-200	480/3	120”	2000	2.4
05691402	P399120-03-300		120”	3000	3.6

BLANK SECTION		
MFG CATALOG NUMBER	MFG MODEL NUMBER	LENGTH
05691502	BS9928-01	28”
05691602	BS9936-01	36”
05691702	BS9948-01	48”
05691802	BS9960-01	60”
05691902	BS9972-01	72”
05692002	BS9984-01	84”
05692102	BS9996-01	96”
05692202	BS99108-01	108”
05692302	BS99120-01	120”
05692402	BS9928-02	28”
05692502	BS9936-02	36”
05692602	BS9948-02	48”
05692702	BS9960-02	60”
05692802	BS9972-02	72”
05692902	BS9984-02	84”
05693002	BS9996-02	96”
05693102	BS99108-02	108”
05693202	BS99120-02	120”
05693302	BS9928-03	28”
05693402	BS9936-03	36”
05693502	BS9948-03	48”
05693602	BS9960-03	60”
05693702	BS9972-03	72”
05693802	BS9984-03	84”
05693902	BS9996-03	96”
05694002	BS99108-03	108”
05694102	BS99120-03	120”

CONTROL SECTION			
MFG CATALOG NUMBER	MFG MODEL NUMBER	VOLTS	PHASE
05694202	CS99-03-PC-480V 3PH	480	3
05694302	CS99-03-PC-240V 3PH	240	
05694402	CS99-03-PC-208V 3PH	208	
05694502	CS99-03-PC-480V 1PH	480	1
05694602	CS99-03-PC-277V 1PH	277	
05694702	CS99-03-PC-240V 1PH	240	
05694802	CS99-03-PC-208V 1PH	208	
05694902	CS99-02-PC-480V 1PH	480	
05695002	CS99-02-PC-277V 1PH	277	
05695102	CS99-02-PC-240V 1PH	240	
05695202	CS99-02-PC-208V 1PH	208	
05695302	CS99-01-PC-480V 1PH	480	
05695402	CS99-01-PC-277V 1PH	277	
05695502	CS99-01-PC-240V 1PH	240	
05695602	CS99-01-PC-208V 1PH	208	
MFG CATALOG NUMBER	MFG MODEL NUMBER	VOLTS	AMPS
05695702	CS99-03-LVTR 480V 15A	480	15
05695802	CS99-03-LVTR 277V 30A	277	30
05695902	CS99-03-LVTR 240V 30A	240	30
05696002	CS99-03-LVTR 208V 30A	208	30
05696102	CS99-03-ATR 277V 18A	277	18
05696202	CS99-03-ATR 240V 22A	240	22
05696302	CS99-03-ATR 208V 22A	208	22
05696402	CS99-02-LVTR 480V 15A	480	15
05696502	CS99-02-LVTR 277V 30A	277	30
05696602	CS99-02-LVTR 240V 30A	240	30
05696702	CS99-02-LVTR 208V 30A	208	30
05696802	CS99-02-ATR 277V 18A	277	18
05696902	CS99-02-ATR 240V 22A	240	22
05697002	CS99-02-ATR 208V 22A	208	22
05697102	CS99-01-LVTR 480V 15A	480	15
05697202	CS99-01-LVTR 277V 30A	277	30
05697302	CS99-01-LVTR 240V 30A	240	30
05697402	CS99-01-LVTR 208V 30A	208	30
05697502	CS99-01-ATR 277V 18A	277	18
05697602	CS99-01-ATR 240V 22A	240	22
05697702	CS99-01-ATR 208V 22A	208	22

Control Section Notes:

01, 02 or 03 designates the cabinet size, either 1, 2, or 3 elements.

The 'ATR' control sections are supplied with a low voltage transformer/relay for 208, 240 or 277V single phase units only. These units are supplied with connection for low voltage thermostat.

The ‘LVTR’ control sections have a transformer and a relay. These control sections can be used with 208, 240, 277, or 480V single or three phase applications.

The ‘PC’ control sections are proportional control. The ‘PC’ control sections will accept either a 0-10 VDC or 4-20 MA signal from a building management system or a stand alone 0-10 VDC thermostat.

3900 Series Hydronic Electric Baseboard Heater

⚠ **WARNING:** This product can expose you to chemicals including nickel which is known to the State of California to cause cancer, and chromium, which is known to the State of California to cause birth defects and/or reproductive harm. For more information go to www.P65Warnings.ca.gov.

Intertek

- Permanent mount self contained unit
- Heating elements are immersed in a heat transferring liquid enclosed by a Copper tube casing with Aluminum fins
- Powder coated 12 gauge heavy duty extruded Aluminum housing with junction boxes located on each end of the unit
- Automatic linear limit
- Wire guard extends along the entire outlet area of the baseboard
- Commercial Brown unit has in-built wireway
- Special colors available, consult factory
- Suitable for high altitude applications
- 1 Year element warranty
- Made in U.S.A.

Standard Models

STANDARD WHITE		COMMERCIAL BROWN		WATTS	BTUs	VOLTS	AMPS	HEATER LENGTH (IN.)	WT. (LBS)
MFG CATALOG NUMBER	MFG MODEL NUMBER	MFG CATALOG NUMBER	MFG MODEL NUMBER						
01114102	E3904-28	01116402	E3904-28C	400	1360	120	3.3	28	16
01114202	F3904-28	01116502	F3904-28C	400	1360	208	1.92		
01114302	H3904-28	01116602	H3904-28C	400/300	1360/1024	240/208	1.6/1.4		
01114402	G3904-28	01116702	G3904-28C	400/300	1360/1024	277/240	1.4/1.25		
01114502	E3906-36	01116802	E3906-36C	600	2048	120	5	36	22
01114602	F3906-36	01116902	F3906-36C	600	2048	208	2.9		
01114702	H3906-36	01117002	H3906-36C	600/450	2048/1536	240/208	2.5/2.2		
01114802	G3906-36	01117102	G3906-36C	600/450	2048/1536	277/240	2.2/1.9		
01114902	E3910-48	01117202	E3910-48C	1000	3413	120	8.3	48	27
01115002	F3910-48	01117302	F3910-48C	1000	3413	208	4.8		
01115102	H3910-48	01117402	H3910-48C	1000/750	3413/2560	240/208	4.2/3.6		
01115202	G3910-48	01117502	G3910-48C	1000/750	3413/2560	277/240	3.6/3.1		
01115302	E3912-60	01117602	E3912-60C	1250	4265	120	10.4	60	33
01115402	F3912-60	01117702	F3912-60C	1250	4265	208	6		
01115502	H3912-60	01117802	H3912-60C	1250/938	4265/3201	240/208	5.2/4.5		
01115602	G3912-60	01117902	G3912-60C	1250/938	4265/3201	277/240	4.5/3.9		
01115702	E3915-72	01118002	E3915-72C	1500	5100	120	12.5	72	41
01115802	F3915-72	01118102	F3915-72C	1500	5100	208	7.2		
01115902	H3915-72	01118202	H3915-72C	1500/1125	5100/3825	240/208	6.3/5.4		
01116002	G3915-72	01118302	G3915-72C	1500/1125	5100/3825	277/240	5.4/4.7		
01116102	F3920-96	01118402	F3920-96C	2000	6826	208	9.6	96	58
01116202	H3920-96	01118502	H3920-96C	2000/1500	6826/5100	240/208	8.3/7.2		
01116302	G3920-96	01118602	G3920-96C	2000/1500	6826/5100	277/240	7.2/6.3		

Product Specifications & Dimensions

The entire heater casing shall be constructed of 6063 extruded Aluminum. minimum thickness of .100” (12 gauge) Aluminum shall be acceptable. Outlet grill shall cover entire length of air discharge opening and be constructed of steel. All casing and grill construction shall be painted with high quality durable powder coated paint.

The heating element shall be high quality Nichrome wire encased in Magnesium Oxide and sealed in copper tube. The heating element shall be sealed in .312” diameter Copper tube and be immersed in heat transfer liquid. Aluminum fins shall be mechanically bonded to the entire heated length of the element for even heat transfer.

Linear automatic thermal limit shall extend the entire heater length of element and protect heater in case of an over-temperature condition.

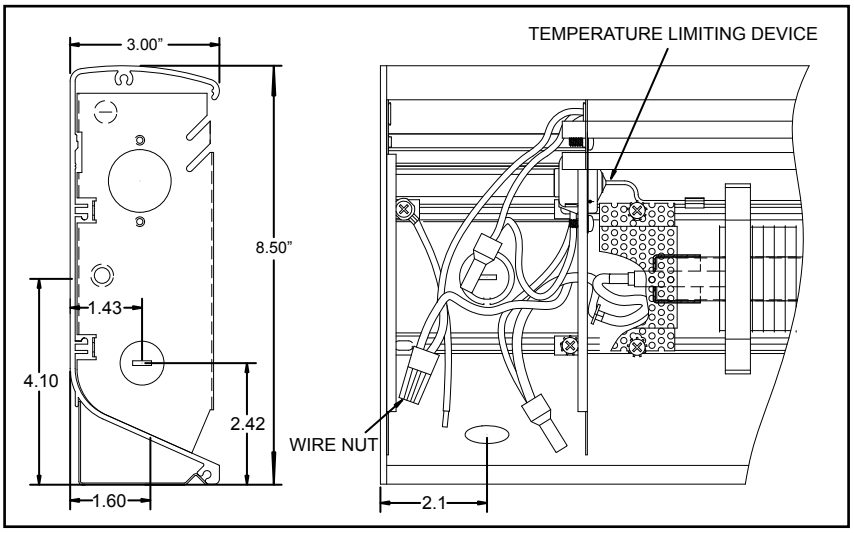

Optional controls shall be mounted in junction box enclosures at either end of heater. Optional integral thermostat shall be located in junction box with adjustment knob or for tamper-proof operation. Optional disconnect switch shall be mounted in junction box. Optional 120 Volt or air conditioning receptacle shall be mounted in junction box.

Optional installation accessories shall include inside and outside corner sections for complete wall perimeter fit. Profile of corners and grill shall have appearance of heat sections for continuous architectural design. Corner accessories and heater sections shall be secured by alignment pins for easy alignment of multiple heater applications.

3700 Series Architectural Style Electric Baseboard Heater

Intertek

- Available in white or brown with stainless steel heating element and aluminum fins
- Powder coated 12 gauge heavy duty extruded Aluminum housing construction with junction boxes located on each end of the unit
- An automatic thermal linear limit is used along the entire heated length of the unit
- Wire guard extends along the entire outlet area of the baseboard
- Special colors available, consult factory
- Made in U.S.A.

WARNING: This product can expose you to chemicals including nickel which is known to the State of California to cause cancer, and chromium, which is known to the State of California to cause birth defects and/or reproductive harm. For more information go to www.P65Warnings.ca.gov.

Standard Models

STANDARD WHITE		COMMERCIAL BROWN		WATTS	BTUs	VOLTS	AMPS	HEATER LENGTH (IN.)	WT. (LBS)
MFG CATALOG NUMBER	MFG MODEL NUMBER	MFG CATALOG NUMBER	MFG MODEL NUMBER						
01160002	E3703-024	01164302	E3703-024B	375	1275	120	3.1	24	14
01160102	F3703-024	01164402	F3703-024B	375	1275	208	1.8		
01160202	H3703-024	01164502	H3703-024B	375 / 281	1275 / 955	240 / 208	1.6/1.4		
01160302	G3703-024	01164602	G3703-024B	375 / 281	1275 / 955	277 / 240	1.6/1.2		
01160402	E3705-028	01164702	E3705-028B	500	1706	120	4.2	28	16
01160502	F3705-028	01164802	F3705-028B	500	1706	208	2.4		
01160602	H3705-028	01164902	H3705-028B	500 / 375	1706 / 1275	240 / 208	2.1/1.8		
01160702	G3705-028	01165002	G3705-028B	500 / 375	1706 / 1275	277 / 240	1.8/1.6		
01160802	E3706-036	01165102	E3706-036B	600	2040	120	5	36	22
01160902	F3706-036	01165202	F3706-036B	600	2040	208	2.9		
01161002	H3706-036	01165302	H3706-036B	600 / 450	2040 / 1530	240 / 208	2.5/2.2		
01161102	G3706-036	01165402	G3706-036B	600 / 450	2040 / 1530	277 / 240	2.2/1.9		
01161202	E3707-040	01165502	E3707-040B	750	2550	120	6.3	40	27
01161302	F3707-040	01165602	F3707-040B	750	2550	208	3.6		
01161402	H3707-040	01165702	H3707-040B	750 / 563	2550 / 1914	240 / 208	3.1/2.7		
01161502	G3707-040	01165802	G3707-040B	750 / 563	2550 / 1914	277 / 240	2.7.2.6		
01161602	E3710-048	01165902	E3710-048B	1000	3413	120	8.3	48	31
01161702	F3710-048	01166002	F3710-048B	1000	3413	208	4.8		
01161802	H3710-048	01166102	H3710-048B	1000 / 750	3413 / 2550	240 / 208	4.2/3.6		
01161902	G3710-048	01166202	G3710-048B	1000 / 750	3413 / 2550	277 / 240	3.6/3.1		
01162002	G3707-048	01166302	G3707-048B	750	2550	277	3.4		
01162102	E3712-060	01166402	E3712-060B	1250	4250	120	10.4	60	33
01162202	F3712-060	01166502	F3712-060B	1250	4250	208	6		
01162302	H3712-060	01166602	H3712-060B	1250 / 938	4250 / 3189	240 / 208	5.2/4.5		
01162402	G3712-060	01166702	G3712-060B	1250 / 938	4250 / 3189	277 / 240	4.5/3.9		
01162502	G3709-060	01166802	G3709-060B	938	3189	277	3.4		
01162602	E3715-072	01166902	E3715-072B	1500	5100	120	12.5	72	41
01162702	F3715-072	01167002	F3715-072B	1500	5100	208	7.2		
01162802	H3715-072	01167102	H3715-072B	1500 / 1125	5100 / 3825	240 / 208	6.3/4.7		
01162902	G3715-072	01167202	G3715-072B	1500 / 1125	5100 / 3825	277 / 240	5.4/4.7		
01163002	G3711-072	01167302	G3711-072B	1125	3825	277	4.1		
01163102	F3717-084	01167402	F3717-084B	1750	5950	208	8.4	84	49
01163202	H3717-084	01167502	H3717-084B	1750 / 1313	5950 / 4464	240 / 208	7.3/6.3		
01163302	G3717-084	01167602	G3717-084B	1750 / 1313	5950 / 4464	277 / 240	6.3/5.5		
01163402	G3713-084	01167702	G3713-084B	1313	4464	277	4.7		
01163502	F3720-096	01167802	F3720-096B	2000	6826	208	9.6	96	58
01163602	H3720-096	01167902	H3720-096B	2000 / 1500	6826 / 5100	240 / 208	8.3/7.2		
01163702	G3720-096	01168002	G3720-096B	2000 / 1500	6826 / 5100	277 / 240	7.2/6.3		
01163802	G3715-096	01168102	G3715-096B	1500	5100	277	5.4		
01163902	F3725-120	01168202	F3725-120B	2500	8532	208	12	120	67
01164002	H3725-120	01168302	H3725-120B	2500 / 1875	8532 / 6375	240 / 208	10.4/9.0		
01164102	G3725-120	01168402	G3725-120B	2500 / 1875	8532 / 6375	277 / 240	9.0/7.8		
01164202	G3718-120	01168502	G3718-120B	1875	6375	277	6.8		

Note: Refer to 3900 Series for product dimension specification

Product Specifications

- The entire heater casing shall be constructed of 6063 extruded Aluminum. Minimum thickness of .100" (12 gauge) Aluminum shall be acceptable. Outlet grill shall cover entire length of air discharge opening and be constructed of steel. All casing and grill construction shall be painted with high quality durable powder coated paint.
- The heating element shall be high quality nichrome wire encased in Magnesium Oxide and sealed in a stainless steel tube.
- Linear automatic thermal limit shall extend the entire heater length of element and protect heater in case of an over-temperature condition.
- Optional controls shall be mounted in junction box enclosures at either end of heater. Optional integral thermostat shall be located in junction box with adjustment knob or for tamper-proof operation. Optional disconnect switch shall be mounted in junction box. Optional 120 Volt or air conditioning receptacle shall be mounted in junction box.
- Optional installation accessories shall include inside and outside corner sections for complete wall perimeter fit. Profile of corners and grill shall have appearance of heat sections for continuous architectural design. Corner accessories and heater sections shall be secured by alignment pins for easy alignment of multiple heater applications.

Field Installed Accessories

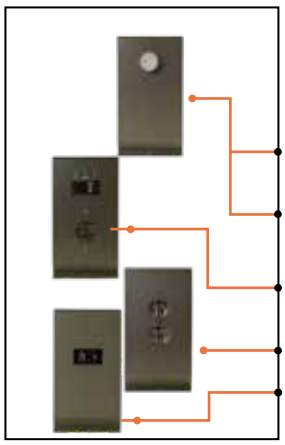

DESCRIPTION	Standard White		Commercial Brown	
	MFG CATALOG NUMBER	MFG MODEL NUMBER	MFG CATALOG NUMBER	MFG MODEL NUMBER
Single Pole, In-Built T-Stat, 22A @ 120-240V; 18A @ 277V; 0°-110° F	01118702	3900T1	01119502	3900T1C
Double Pole, In-Built T-Stat, 22A @ 120-240V; 18A @ 277V; 0°-110° F	01118802	3900T2	01119602	3900T2C
Air Conditioning Receptacle Section, 20 Amp @ 125-277V	01118902	3900AC	01119902	3900ACC
120V. Receptacle Section, 15 Amp	01119002	3900REC	01120002	3900RECC
Disconnect Switch, 20 Amp @ 125-277VAC; DPST	01119402	3900DS	01120402	3900DSC

OUTSIDE CORNER

INSIDE CORNER

Outside and inside corner sections are 6" on longest side

⚠ **WARNING:** This product can expose you to chemicals including nickel which is known to the State of California to cause cancer, and chromium, which is known to the State of California to cause birth defects and/or reproductive harm. For more information go to www.P65Warnings.ca.gov.

Baseboard Sections

STANDARD WHITE		COMMERCIAL BROWN		DESCRIPTION	
MFG CATALOG NUMBER	MFG MODEL NUMBER	MFG CATALOG NUMBER	MFG MODEL NUMBER	SECTION	SIZE
01121502	39BS28	0112215	39BS28C	Blank Section	28"
01121602	39BS36	0112222	39BS36C		36"
01121702	39BS48	0112239	39BS48C		48"
01121802	39BS60	0112246	39BS60C		60"
01121902	39BS72	0112253	39BS72C		72"
01122002	39BS96	0112260	39BS96C		96"
01150902	39BS120	0115100	39BS120C		120"
01119102	3900-ICS	0112017	3900-ICSC	Inside Corner	-
01119202	3900-OCS	0112024	3900-OCSC	Outside Corner	
01119302	3900-CS	01120302	3900-CSC	Control Section	4" Blank

Dimension

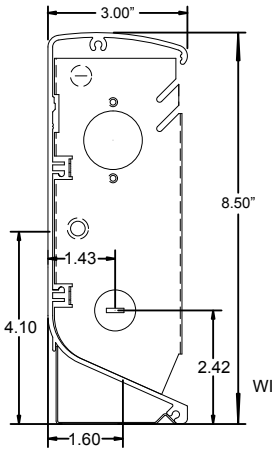

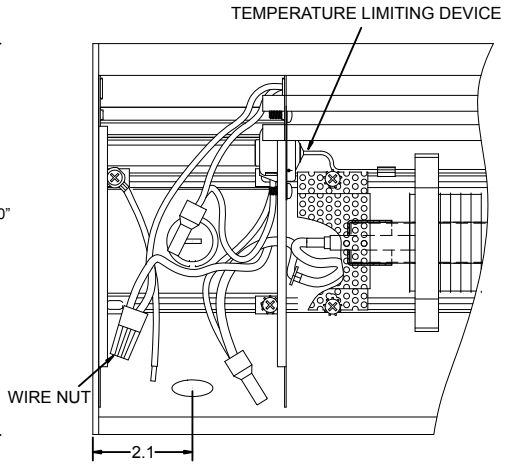

Wireway Covers (White Units Only)

MFG CATALOG NUMBER	MFG MODEL NUMBER	LENGTH	WT. (LBS)
01122802	3900WW28	28"	2
01122902	3900WW36	36"	2.5
01123002	3900WW48	48"	3.5
01123102	3900WW60	60"	4.5
01123202	3900WW72	72"	5.5
01123302	3900WW96	96"	7.5
01151102	3900WW120	120"	7.5

2900S Series Electric Baseboard - Stainless Steel Element Convection Heater

⚠ **WARNING:** This product can expose you to chemicals including nickel which is known to the State of California to cause cancer, and chromium, which is known to the State of California to cause birth defects and/or reproductive harm. For more information go to www.P65Warnings.ca.gov.

- Available in white or ivory with stainless steel heating element and Aluminum fins
- Painted 22 gauge steel front with 20 gauge junction boxes located on each end of the heater - junction boxes contain quick connect cable clamps and 6"ground lead wires
- Over-temperature thermal limit extends entire length of heated area
- A full length wireway provided along the back of the heater - enclosed conduit available
- Heater can be mounted to the wall by using the key hole knockouts every 4" at the back of the heater
- Optional In-Built thermostats field installed in the junction box
- For high altitude applications, delete the SW in the model number and add HAW
- Height: 6" Depth: 2 ½"
- Made in U.S.A.

Intertek

Standard Models

IVORY		WHITE		WATTS	BTUs	VOLTS	AMPS	HEATER LENGTH (IN)	WT. (LBS)
MFG CATALOG NUMBER	MFG MODEL NUMBER	MFG CATALOG NUMBER	MFG MODEL NUMBER						
01043002	E2903-024S	01049902	E2903-024SW	375	1275	120	3.1	24	5
01043102	F2903-024S	01050002	F2903-024SW	375	1275	208	1.8		
01043202	H2903-024S	01050102	H2903-024SW	375 / 281	1275 / 955	240 / 208	1.6/1.4		
01043302	G2903-024S	01050202	G2903-024SW	375 / 281	1275 / 955	277 / 240	1.6/1.2		
01043402	E2905-028S	01050302	E2905-028SW	500	1706	120	4.2	28	6
01043502	F2905-028S	01050402	F2905-028SW	500	1706	208	2.4		
01043602	H2905-028S	01050502	H2905-028SW	500 / 375	1706 / 1275	240 / 208	2.1/1.8		
01043702	G2905-028S	01050602	G2905-028SW	500 / 375	1706 / 1275	277 / 240	1.8/1.6		
01043802	E2906-036S	01050702	E2906-036SW	600	2040	120	5	36	7
01043902	F2906-036S	01050802	F2906-036SW	600	2040	208	2.9		
01044002	H2906-036S	01050902	H2906-036SW	600 / 450	2040 / 1530	240 / 208	2.5/2.2		
01044102	G2906-036S	01051002	G2906-036SW	600 / 450	2040 / 1530	277 / 240	2.2/1.9		
01044202	E2907-040S	01051102	E2907-040SW	750	2550	120	6.3	40	8
01044302	F2907-040S	01051202	F2907-040SW	750	2550	208	3.6		
01044402	H2907-040S	01051302	H2907-040SW	750 / 563	2550 / 1914	240 / 208	3.1/2.7		
01044502	G2907-040S	01051402	G2907-040SW	750 / 563	2550 / 1914	277 / 240	2.7.2.6		
01044602	E2910-048S	01051502	E2910-048SW	1000	3413	120	8.3	48	10
01044702	F2910-048S	01051602	F2910-048SW	1000	3413	208	4.8		
01044802	H2910-048S	01051702	H2910-048SW	1000 / 750	3413 / 2550	240 / 208	4.2/3.6		
01044902	G2910-048S	01051802	G2910-048SW	1000 / 750	3413 / 2550	277 / 240	3.6/3.1		
01045002	G2907-048S	01051902	G2907-048SW	750	2550	277	3.4		
01045102	E2912-060S	01052002	E2912-060SW	1250	4250	120	10.4	60	12
01030002	F2912-060S	01052102	F2912-060SW	1250	4250	208	6		
01030102	H2912-060S	01052202	H2912-060SW	1250 / 938	4250 / 3189	240 / 208	5.2/4.5		
01030202	G2912-060S	01052302	G2912-060SW	1250 / 938	4250 / 3189	277 / 240	4.5/3.9		
01030302	G2909-060S	01052402	G2909-060SW	938	3189	277	3.4		
01030402	E2915-072S	01052502	E2915-072SW	1500	5100	120	12.5	72	14
01030502	F2915-072S	01052602	F2915-072SW	1500	5100	208	7.2		
01030602	H2915-072S	01052702	H2915-072SW	1500 / 1125	5100 / 3825	240 / 208	6.3/4.7		
01030702	G2915-072S	01052802	G2915-072SW	1500 / 1125	5100 / 3825	277 / 240	5.4/4.7		
01030802	G2911-072S	01052902	G2911-072SW	1125	3825	277	4.1		
01030902	F2917-084S	01053002	F2917-084SW	1750	5950	208	8.4	84	16
01031002	H2917-084S	01053102	H2917-084SW	1750 / 1313	5950 / 4464	240 / 208	7.3/6.3		
01031102	G2917-084S	01053202	G2917-084SW	1750 / 1313	5950 / 4464	277 / 240	6.3/5.5		
01031202	G2913-084S	01053302	G2913-084SW	1313	4464	277	4.7		
01031302	F2920-096S	01053402	F2920-096SW	2000	6826	208	9.6	96	18
01031402	H2920-096S	01053502	H2920-096SW	2000 / 1500	6826 / 5100	240 / 208	8.3/7.2		
01031502	G2920-096S	01053602	G2920-096SW	2000 / 1500	6826 / 5100	277 / 240	7.2/6.3		
01031602	G2915-096S	01053702	G2915-096SW	1500	5100	277	5.4		
01032102	F2925-120S	01054202	F2925-120SW	2500	8532	208	12	120	22
01032202	H2925-120S	01054302	H2925-120SW	2500 / 1875	8532 / 6375	240 / 208	10.4/9.0		
01032302	G2925-120S	01054402	G2925-120SW	2500 / 1875	8532 / 6375	277 / 240	9.0/7.8		
01032402	G2918-120S	01054502	G2918-120SW	1875	6375	277	6.8		

2900A Series - International Models

WHITE		WATTS	BTUs	VOLTS	HEATER LENGTH (IN)	WT. (LBS)
MFG CATALOG NUMBER	MFG MODEL NUMBER					
01157602	M2903-24AWi	375	1275	220	24"	10
01157702	H2903-24AWi			240		
01157802	M2905-28AWi	500	1706	220	28"	11
01159702	H2905-28AWi			240		
01158002	M2906-36AWi	600	2040	220	36"	11.5
01158102	H2906-36AWi			240		
01158202	M2907-40AWi	750	2550	220	40"	13
01158302	H2907-40AWi			240		
01158402	M2910-48AWi	1000	3413	220	48"	14
01158502	H2910-48AWi			240		
01158602	M2912-60AWi	1250	4250	220	60"	16
01158702	H2912-60AWi			240		
01158802	M2915-72AWi	1500	5100	220	72"	19
01158902	H2915-72AWi			240		
01159002	M2917-84AWi	1750	5950	220	84"	22
01180002	H2917-84AWi			240		
01180302	M2925-120AWi	2500	8532	220	120"	31
01180402	H2920-120AWi			240		

Note: Wireway length is the same as baseboard length.

WARNING: This product can expose you to chemicals including nickel which is known to the State of California to cause cancer, and chromium, which is known to the State of California to cause birth defects and/or reproductive harm. For more information go to www.P65Warnings.ca.gov.

Intertek

- Bankers bronze with stainless steel heating element and Aluminum fins
- Powder coated 22 gauge steel front with 20 gauge junction boxes located on each end of the heater - junction boxes contain quick connect cable clamps and 6" ground lead wires
- Standard inlet and outlet wire guards
- Over-temperature thermal limit extends entire heated length of unit
- A full length wireway provided along the back of the heater
- Heater can be mounted to the wall by using the key hole knockouts every 4" at the back of the heater
- Optional In-Built thermostats field installed in the junction box
- Height: 6" Depth: 2 ½"
- Made in U.S.A.

Standard Models

MFG CATALOG NUMBER	MFG MODEL NUMBER	WATTS	BTUs	VOLTS	AMPS	HEATER LENGTH (IN)	WT. (LBS)
01038302	E2903-024C	375	1275	120	3.1	24	5
01038402	F2903-024C	375	1275	208	1.8		
01038502	H2903-024C	375 / 281	1275 / 955	240 / 208	1.6 / 1.4		
01038602	G2903-024C	375 / 281	1275 / 955	277 / 240	1.6 / 1.2		
01038702	E2905-028C	500	1706	120	4.2	28	6
01038802	F2905-028C	500	1706	208	2.4		
01038902	H2905-028C	500 / 375	1706 / 1275	240 / 208	2.1 / 1.8		
01039002	G2905-028C	500 / 375	1706 / 1275	277 / 240	1.8 / 1.6		
01039102	E2906-036C	600	2040	120	5.0	36	7
01039202	F2906-036C	600	2040	208	2.9		
01039302	H2906-036C	600 / 450	2040 / 1530	240 / 208	2.5 / 2.2		
01039402	G2906-036C	600 / 450	2040 / 1530	277 / 240	2.2 / 1.9		
01039502	E2907-040C	750	2550	120	6.3	40	8
01039602	F2907-040C	750	2550	208	3.6		
01039702	H2907-040C	750 / 563	2550 / 1914	240 / 208	3.1 / 2.7		
01039802	G2907-040C	750 / 563	2550 / 1914	277 / 240	2.7 / 2.6		
01039902	E2910-048C	1000	3413	120	8.3	48	10
01040002	F2910-048C	1000	3413	208	4.8		
01040102	H2910-048C	1000 / 750	3413 / 2550	240 / 208	4.2 / 3.6		
01040202	G2910-048C	1000 / 750	3413 / 2550	277 / 240	3.6 / 3.1		
01040302	G2907-048C	750	2550	277	3.4		
01040402	E2912-060C	1250	4250	120	10.4	60	12
01040502	F2912-060C	1250	4250	208	6.0		
01040602	H2912-060C	1250 / 938	4250 / 3189	240 / 208	5.2 / 4.5		
01040702	G2912-060C	1250 / 938	4250 / 3189	277 / 240	4.5 / 3.9		
01040802	G2909-060C	938	3189	277	3.4		
01040902	E2915-072C	1500	5100	120	12.5	72	14
01041002	F2915-072C	1500	5100	208	7.2		
01041102	H2915-072C	1500 / 1125	5100 / 3825	240 / 208	6.3 / 4.7		
01041202	G2915-072C	1500 / 1125	5100 / 3825	277 / 240	5.4 / 4.7		
01041302	G2911-072C	1125	3825	277	4.1		
01041402	F2917-084C	1750	5950	208	8.4	84	16
01041502	H2917-084C	1750 / 1313	5950 / 4464	240 / 208	7.3 / 6.3		
01041602	G2917-084C	1750 / 1313	5950 / 4464	277 / 240	6.3 / 5.5		
01041702	G2913-084C	1313	4464	277	4.7		
01041802	F2920-096C	2000	6826	208	9.6	96	18
01041902	H2920-096C	2000 / 1500	6826 / 5100	240 / 208	8.3 / 7.2		
01042002	G2920-096C	2000 / 1500	6826 / 5100	277 / 240	7.2 / 6.3		
01042102	G2915-096C	1500	5100	277	5.4		
01042602	F2925-120C	2500	8532	208	12.0	120	22
01042702	H2925-120C	2500 / 1875	8532 / 6375	240 / 208	10.4 / 9.0		
01042802	G2925-120C	2500 / 1875	8532 / 6375	277 / 240	9.0 / 7.8		
01042902	G2918-120C	1875	6375	277	6.8		

International Models

MFG CATALOG NUMBER	MFG MODEL NUMBER	WATTS	BTUs	VOLTS	AMPS	HEATER LENGTH (IN)	WT. (LBS)
01180502	M2903-024CI	375	1275	220	1.7	24	5
01180602	H2903-024CI			240	240		
01180702	M2905-028CI	500	1706	220	2.3	28	6
01180802	H2905-028CI			240	2.1		
01180902	M2906-036CI	600	2040	220	2.7	36	7
01181002	H2906-036C			240	2.5		
01181102	M2907-040CI	750	2550	220	3.4	40	8
01181202	H2907-040C			240	3.1		
01181302	M2910-048CI	1000	3413	220	4.6	48	10
01181402	H2910-048CI			240	4.2		
01181502	M2912-060CI	1250	4250	220	5.7	60	12
01181602	H2912-060C			240	5.2		
01181702	M2915-072CI	1500	5100	220	6.8	72	14
01181802	H2915-072CI			240	6.3		
01181902	M2917-084CI	1750	5950	220	8.0	84	16
01182002	H2917-084CI			240	7.3		
01182102	M2920-096CI	2000	6826	220	9.1	96	18
01182202	H2920-096CI			240	8.3		
01182302	M2925-120CI	2500	8532	220	11.4	120	22
01182402	H2925-120CI			240	10.4		

In-Built Thermostat Kits

MFG CATALOG NUMBER	MFG MODEL NUMBER	DESCRIPTION	WT. (LBS)
01054602C	TBS	SPST-In-Built 22A @ 120-240V 18A @ 277V (0°-110F°)	½
01054702C	TBD	DPST-In-Built 22A @ 120-240V 18A @ 277V (0°-110F°)	½

*Junction box covers supplied with baseboard heater will work in conjunction with in-built thermostat kits.

WARNING: This product can expose you to chemicals including nickel which is known to the State of California to cause cancer, and chromium, which is known to the State of California to cause birth defects and/or reproductive harm. For more information go to www.P65Warnings.ca.gov.

Field Installed Accessories

DESCRIPTION	IVORY		WHITE		BANKERS BRONZE		WT. (LBS)
	MFG CATALOG NUMBER	MFG MODEL NUMBER	MFG CATALOG NUMBER	MFG MODEL NUMBER	MFG CATALOG NUMBER	MFG MODEL NUMBER	
Disconnect Switch, 20 Amp, 120-277V	01061002	DS	01061102	DSW	01061202	DSB	1
Corner Sections	01054902	CS	01055002	CSW	01055102	CSB	
1" Joiner Kits	01055202	JK	01055302	JKW	01055402	JKB	¼
6" Blank Relay Section (Relay Not Included)**	01055502	LVRS	01055602	LVRSW	01055702	LVRSB	1 ½
Receptacle Section (Baseboard Mounted) 15 Amp 120 VAC	01055802	BDR115	01055902	BDR115W	01056002	BDR115B	¼
Receptacle Section (Mounted in 6" Blank) 15 Amp 120 VAC	01056102	DR115	01056202	DR115W	01056302	DR115B	2
Transfer Switch (Mounted in 6" Blank) 1 6 Amp 120 VAC	01056402	SR120	01056502	SR120W	01056602	SR120B	
Transfer Switch (Mounted in 6" Blank) 16 Amp 240 VAC	01056702	SR220	01056802	SR220W	01056902	SR220B	

**Not for use with 24A06G-1 relay

WARNING: This product can expose you to chemicals including nickel which is known to the State of California to cause cancer, and chromium, which is known to the State of California to cause birth defects and/or reproductive harm. For more information go to www.P65Warnings.ca.gov.

Optional Wireway Covers

MFG CATALOG NUMBER	MFG MODEL NUMBER	LENGTH (in.)	COVER LENGTH (in.)	WT. (LBS)
01057002	WWA01	24"	20	1
01057102	WWA02	28"	24	1.5
01057202	WWA03	36"	32	2
01057302	WWA04	40"	36	2.5
01057402	WWA05	48"	44	3
01057502	WWA06	60"	56	4
01057602	WWA07	72"	68	5
01057702	WWA08	84"	80	6
01057802	WWA09	96"	92	7
01057902	WWA00	120"	116	8

WARNING: This product can expose you to chemicals including nickel which is known to the State of California to cause cancer, and chromium, which is known to the State of California to cause birth defects and/or reproductive harm. For more information go to www.P65Warnings.ca.gov.

Blank Sections

LENGTH	IVORY		WHITE		BANKERS BRONZE		WT. (LBS)
	MFG CATALOG NUMBER	MFG MODEL NUMBER	MFG CATALOG NUMBER	MFG MODEL NUMBER	MFG CATALOG NUMBER	MFG MODEL NUMBER	
24"	01058002	BBS024A	01059002	BBS024AW	01060002	BBS024C	5
28"	01058102	BBS028A	01059102	BBS028AW	01060102	BBS028C	5 ½
36"	01058202	BBS036A	01059202	BBS036AW	01060202	BBS036C	6
40"	01058302	BBS040A	01059302	BBS040AW	01060302	BBS040C	7
48"	01058402	BBS048A	01059402	BBS048AW	01060402	BBS048C	8
60"	01058502	BBS060A	01059502	BBS060AW	01060502	BBS060C	10
72"	01058602	BBS072A	01059602	BBS072AW	01060602	BBS072C	12
84"	01058702	BBS084A	01059702	BBS084AW	01060702	BBS084C	15
96"	01058802	BBS096A	01059802	BBS096AW	01060802	BBS096C	17
120"	01058902	BBS120A	01059902	BBS120AW	01060902	BBS120C	20

WARNING: This product can expose you to chemicals including nickel which is known to the State of California to cause cancer, and chromium, which is known to the State of California to cause birth defects and/or reproductive harm. For more information go to www.P65Warnings.ca.gov.

The largest selection of overhead electric infrared heaters in the industry today!

Flat Panel Emitter Heaters

- High-density, medium wavelength radiant heat emitter for indoor heating applications
- Shipped fully assembled with wire guard and standard 60° symmetric heat pattern
- Flat panel emitter operates at 78.5% radiant efficiency & generates no lumen glare
- Designed for indoor heating applications or protected outdoor areas
- Life expectancy of 25,000 hours

FSS Series

Intertek

WARNING: This product can expose you to chemicals including nickel which is known to the State of California to cause cancer, and chromium, which is known to the State of California to cause birth defects and/or reproductive harm. For more information go to www.P65Warnings.ca.gov.

FSA Series

- Gold anodized aluminum housing
- Designed for rugged industrial applications
- Chain or suspension mounting options

- Extruded aluminum housing
- Designed for commercial applications
- Chain, suspension, wall, or recessed mounting options

Quartz Lamp Mul-T-Mount Heaters

- Short wavelength radiant heat emitter for indoor & total exposed outdoor heating applications
- Gold anodized interior reflector offered in symmetrical or asymmetrical heat pattern options
- Clear quartz lamp operates at 96% radiant efficiency & generates 8-lumens per watt
- Designed for indoor and totally exposed outdoor heating application areas
- Element life expectancy of 5,000 hours

TH/THSS Series &
TH/THSS-AG Series

Intertek

WARNING: This product can expose you to chemicals including nickel which is known to the State of California to cause cancer, and chromium, which is known to the State of California to cause birth defects and/or reproductive harm. For more information go to www.P65Warnings.ca.gov.

THA Series

- Housing finish: bankers bronze or stainless steel
- Designed for rugged industrial applications
- Chain, suspension, wall, or recessed mounting options
- Shipped with clear quartz lamp
- AG suffix models include “glare” reducing sleeves

- Extruded aluminum housing
- Nickel gray finish
- Designed for commercial applications
- Chain or suspension mounting options
- Shipped with clear quartz lamps and amber gray “glare” reducing sleeves

Types of Electric Infrared Application & Sizing Details

- **Indoor Spot Heating**
  Average: 25-60 watts per square foot
  Calculation: Sq.ft. x desired temperature rise = total watts required
- **Total Area / Building Heating**
  Average: 8-20 watts per square foot
  Calculation: Sq.ft. x . 5 x desired temperature rise = total watts required
- **Outdoor Spot Heating**
  Average: 2 watts per square foot per desired temperature rise
  Calculation: Sq.ft. x 2 x desired temperature rise = total watts required
- **Outdoor Snow & Ice Control Heating System**
  Average: 85-110 watts per square foot
  Calculation: Sq.ft. x required watts / sq.ft. = total watts required

Quartz Lamp Glare Reduction Options

12mm Clear Quartz Lamp

- Approximately 96% radiant efficient
- 8 lumens per watt on a 3200 watt fixture, equals 25,600 lumens
- Can be mounted 10’ and above indoors, 8’ to 10’ outdoors
- Emits a bright light, but extremely energy efficient site of installation

12mm Red Vycor Sleeve

- Slips over 12mm quartz lamp to reduce glare
- Filters approximately 90% of visible light
- Allows 90% of the energy to pass through to installed area
- Reduces 90% of the clear quartz lumens

8mm Clear Quartz Lamp with Amber Gray Sleeve

- When used together, reduces 94% of lumens of clear quartz lamp
- Allows 90% of energy to pass through sleeve to installed area
- Eliminates red glow found with using red vycor sleeve
- Shipped standard on all AG suffix & THA model series

Heavy Duty Overhead Infrared Heaters for Indoor Spot Heating, Zone, or Total Area Heating Applications

FSS-14

FSS-31

FSS-43

Intertek

⚠ WARNING: This product can expose you to chemicals including nickel which is known to the State of California to cause cancer, and chromium, which is known to the State of California to cause birth defects and/or reproductive harm. For more information go to www.P65Warnings.ca.gov.

- High-density, medium wavelength radiant heat, with 60° symmetric heat pattern
- Flat panel emitter operates at a radiant efficiency of 78.5%
- Non-glare, uniform heat generating directional heat pattern
- Rugged steel structure surrounds emitter element, great for high vibration areas
- Gold anodized aluminum housing for efficient, long term reflectivity & corrosion resistance
- Single or three phase wiring on select models
- "L" brackets included for chain suspension, or rigid mounting
- Field wiring box mounted on each heater
- Heavy duty wire guard factory installed
- 25,000 hour element life expectancy
- Shipped fully assembled
- Made in U.S.A.

Standard Models

MFG CATALOG NUMBER	MFG MODEL NUMBER	WATTS	VOLTS	PHASE	BTUs / Hr.	AMPS 1-PH	AMPS 3-PH	ELEMENTS PER HEATER	WT. (LBS)
04881502	FSS-1412-1	1450	120	1	4947	12.1		1	7
04881602	FSS-1420-1		208	1		6.97			
04881702	FSS-1424-1		240	1		6.04			
04881802	FSS-1427-1		277	1		5.23			
04881902	FSS-1448-1		480	1		3.02			
04882002	FSS-1457-1		600	1		2.52			
04882102	FSS-3120-1	3150	208	1	10,748	15.14			13
04882202	FSS-3124-1		240	1		13.13			
04882302	FSS-3127-1		277	1		11.37			
04882402	FSS-3148-1		480	1		6.56			
04882502	FSS-3157-1		600	1		5.48			
04882602	FSS-4320-3	4300	208	1 or 3	14,672	20.67	11.94		18
04882702	FSS-4324-3		240	1 or 3		17.91	10.36		
04882802	FSS-4327-1		277	1		15.52			
04882902	FSS-4348-3		480	1 or 3		8.96	5.18		
04883002	FSS-4357-3		600	1 or 3		7.48	4.32		
04883102	FSS-9520-3	9500	208	1 or 3	32,414	45.67	26.39		31
04883202	FSS-9524-3		240	1 or 3		39.6	22.89		
04883302	FSS-9527-1		277	1		34.3			
04883402	FSS-9548-3		480	1 or 3		19.8	11.44		
04883502	FSS-9557-3		600	1 or 3		16.5	9.54		
04883602	FSS95TMK	TANDEM MOUNTING KIT							6

FSS/FSA Replacement Elements	
MFG CATALOG NUMBER	MFG MODEL NUMBER
01356002	64337-001
01356102	64337-002
01356202	64337-003
01356302	64337-004
01356402	64337-005
01356502	64337-006
01356602	64337-007
01356702	64337-008
01356802	64337-009
01356902	64337-010
01357002	64337-011
01357102	64337-012
01357202	64337-013
01357302	64337-014
01357402	64337-015
01357502	64337-016
01357602	64337-017
01357702	64337-018
01357802	64337-019
01357902	64337-020
01358002	64337-021

Suspension Heating Application

Spot Indoor Heaters

- Directional heating systems for where and when you need it
- No element glare
- No glass materials
- Rigid housing & element structure
- Designed for rugged & dirty environments
- Delivers higher and more uniform heat output with less energy consumption
- Ideal spot heating system for high-bay buildings up to 24'

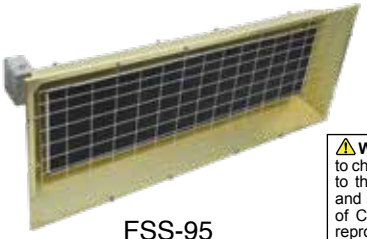

FSS-95

⚠ **WARNING:** This product can expose you to chemicals including nickel which is known to the State of California to cause cancer, and chromium, which is known to the State of California to cause birth defects and/or reproductive harm. For more information go to www.P65Warnings.ca.gov.

(2) FSS-95 heaters with TMK-95 tandem mounting kit

FSS Series Dimensions

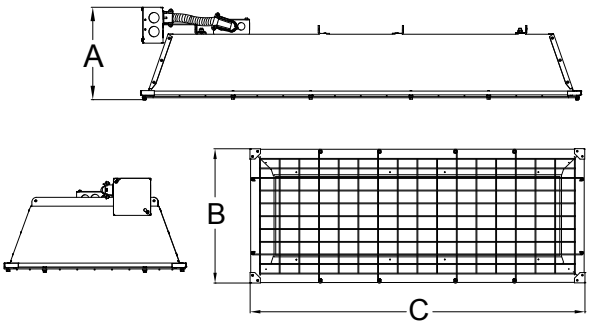

MFG MODEL NUMBER	DIMENSIONS (in.)		
	"A" DEPTH	"B" WIDTH	"C" LENGTH
FSS-14	8 ½	9	26
FSS-31	8 ½	9	46
FSS-43	9 ¾	20	29
FSS-95	7 ¾	20	49
FSS-95 TANDEM	7 ¾	20	108

Mounting Clearances & Recommended Mounting Height

Required Minimum Mounting Clearances		KW	Recommended Mounting Height
FSS-14 and FSS-31 6" from ceiling FSS-43 and FSS-95 24" from ceiling 36" from vertical surface & from another heater 72" from face of heater to combustible surface		1.4	8' - 10'
		3.1	8' - 12'
		4.3	10' - 14'
		9.5	12' - 16'
FSS-95 Tandem Only	87" from face of heater to combustible surface	(2) 9.5	15' - 30'

Sizing Chart

MOUNTING HEIGHT	MFG MODEL NUMBER	LENGTH	WIDTH	COVERAGE (SQ. FT.)	WATTS (SQ. FT.)
8'	FSS-14	8	8	64	22.7
	FSS-31	9	8	72	43.8
10'	FSS-14	11	10	110	13.2
	FSS-31	11	10	110	28.6
	FSS-43	12	10	120	35.8
12'	FSS-31	12	11.5	138	22.8
	FSS-43	14	12	168	25.6
	FSS-95	15	13	195	48.7
14'	FSS-43	16	14	224	19.2
	FSS-95	18	16	288	33.0
16'	FSS-43	18	16	288	14.9
	FSS-95	21	18	378	25.1
	FSS-95 TANDEM	24	19	456	41.7
18'	FSS-95	23	20	460	20.7
	FSS-95 TANDEM	28	20	560	33.9
20'	FSS-95 TANDEM	28	23	644	29.5
24'	FSS-95 TANDEM	33	27	891	21.3
30'	FSS-95 TANDEM	41	32	1312	14.5

Product Specifications

Housing & Construction:
.040 Gold anodized Aluminum housing for efficient, long-term reflectivity and corrosion resistance. High-density radiant heat. Housing is ETL Listed for indoor, dry environment applications only. Made in U.S.A.

Reflector:
60 degree symmetric heat pattern, reference the sizing chart to determine overall coverage based on the mounting height.

Elements:
Heavy duty flat panel emitter. Available wattages in 1450, 3150, 4300 and 9500 Watts per element. Available in standard voltages from 120 to 600 Volts.

Controls:
Flat panel emitter heaters are not manufactured with any control device on the unit. All controls and accessories should be specified as remote mounted. Please consult the technical sales department of factory for help in determining applicable controls. Please follow installation instructions that accompany each heater.

Accessories:
Power contactor panels.

ICP Control Panels

Features

- NEMA 4 outdoor rated control box
- Door interlock disconnect switch
- Custom made to customers specifications
- SCR and proportional controls optional
- Circuit breakers sized for heater load per stage
- Please see ICP page to select panel to control one or multiple units, if required.

⚠ **WARNING:** This product can expose you to chemicals including nickel which is known to the State of California to cause cancer, and chromium, which is known to the State of California to cause birth defects and/or reproductive harm. For more information go to www.P65Warnings.ca.gov.

Architectural Overhead Infrared Heaters for Indoor Spot Heating, Zone, or Total Area Heating Applications

FSA-14

FSA-95

FSA-31

FSA-43

Intertek

WARNING: This product can expose you to chemicals including nickel which is known to the State of California to cause cancer, and chromium, which is known to the State of California to cause birth defects and/or reproductive harm. For more information go to www.P65Warnings.ca.gov.

- ETL C/US Listed for suspended high-bay indoor or protected outdoor applications
- Designed for spot / zone or total area heating applications
- Heating elements included (Heavy Duty Single Flat Panel Emitter)
- Medium wave emitter operates at 78.5% radiant efficiency - with a 25,000 hour life expectancy
- Extruded aluminum housing with a nickel-gray finish, providing a 60° symmetrical heat pattern
- Electrical enclosure included for direct wire installation
- Single or three-phase wiring configurations
- "L" brackets included on the top of the heating housing for chain suspension, wall mounting, or ceiling mounting options
- Units can be surface mounted, semi-recessed, or fully-recessed
- Zinc plated heavy-gauge safety grills included for all models
- Optional wall mounting bracket sold separately
- Shipped fully assembled and made in U.S.A.

Standard Models

MFG CATALOG NUMBER	MFG MODEL NUMBER	WATTS	VOLTS	PHASE	BTUs / Hr.	AMPS 1-PH	AMPS 3-PH	WT. (LBS)
04889002	FSA-1412-1	1450	120	1	4947	12.1		13
04889102	FSA-1420-1		208			6.97		
04889202	FSA-1424-1		240			6.04		
04889302	FSA-1427-1		277			5.23		
04889402	FSA-1448-1		480			3.02		
04889502	FSA-1457-1		600			2.52		
04889602	FSA-3120-1	3150	208	1	10,748	15.14		22
04889702	FSA-3124-1		240			13.13		
04889802	FSA-3127-1		277			11.37		
04889902	FSA-3148-1		480			6.56		
04890002	FSA-3157-1		600			5.48		
04890102	FSA-4320-3	4300	208	1 or 3	14,672	20.67	11.94	24
04890202	FSA-4324-3		240	1 or 3		17.91	10.36	
04890302	FSA-4327-1		277	1		15.52		
04890402	FSA-4348-3		480	1 or 3		8.96	5.18	
04890502	FSA-4357-3		600	1 or 3		7.48	4.32	
04890602	FSA-9520-3	9500	208	1 or 3	32,414	45.67	26.39	39
04890702	FSA-9524-3		240	1 or 3		39.6	22.89	
04890802	FSA-9527-1		277	1		34.3		
04890902	FSA-9548-3		480	1 or 3		19.8	11.44	
04891002	FSA-9557-3		600	1 or 3		16.5	9.54	

Optional Wall Mounting Brackets

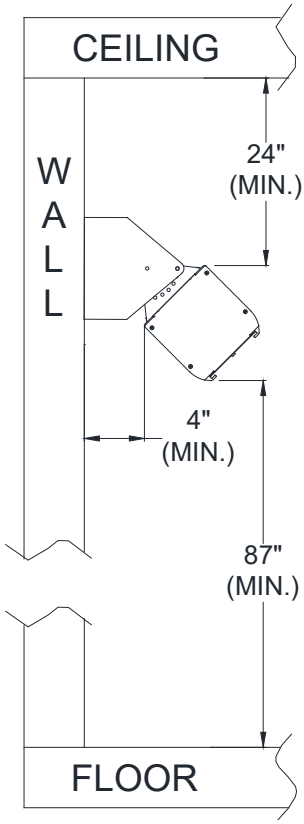

OPTIONAL WALL MOUNTING BRACKETS	
MFG CATALOG NUMBER	MFG MODEL NUMBER
04892002	FSA-14-31WMB
04892102	FSA-43-95WMB

FSA Series Dimensions

FSA-14 / FSA-31

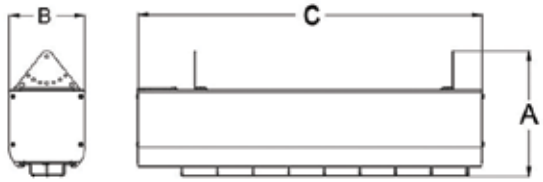

FSA-43 / FSA-95

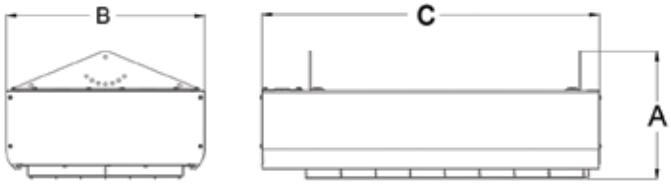

MFG MODEL NUMBER	DIMENSIONS (in.)		
	"A" DEPTH	"B" WIDTH	"C" LENGTH
FSA-14	9	5 ¾	26 1/16
FSA-31	9	5 ¾	47 1/16
FSA-43	9 ¼	14 ¾	25 1/16
FSA-95	9 ¼	14 ¾	47 1/16

Mounting Clearances & Recommended Mounting Height

Mounting Clearances		KW	Recommended Mounting Height
All FSA Models	24" from ceiling 36" from vertical surface & from another heater *(4" when using optional mounting bracket)* 72" from face of heater to combustible surface	1.4	8' - 10'
		3.1	8' - 12'
		4.3	10' - 14'
		9.5	12' - 16'

Sizing Chart

MOUNTING HEIGHT	MFG MODEL NUMBER	LENGTH	WIDTH	COVERAGE (SQ. FT.)	WATTS (SQ. FT.)
8'	FSA-14	8	8	64	22.7
	FSA-31	9	8	72	43.8
10'	FSA-14	11	10	110	13.2
	FSA-31	11	10	110	28.6
	FSA-43	12	10	120	35.8
12'	FSA-31	12	11.5	138	22.8
	FSA-43	14	12	168	25.6
	FSA-95	15	13	195	48.7
14'	FSA-43	16	14	224	19.2
	FSA-95	18	16	288	33.0
16'	FSA-43	18	16	288	14.9
	FSA-95	21	18	378	25.1

Product Specifications

Housing & Construction:
Extruded 6063 aluminum housing with protective grill. Powder coat silver finish for excellent durability and attractive appearance in commercial applications. ETL C/US listed for indoor, dry environments. Made in USA.

Elements:
Heavy duty flat panel emitter. Available wattages in 1450, 3150, 4300 and 9500 Watts per element. Available in standard voltages from 120 to 600 Volts.
*Note: Replacement elements located on FSS Series pages.

Controls:
Flat panel emitter heaters are not manufactured with any control device on the unit. All controls and accessories should be specified as remote mounted. Please consult the technical sales department of factory for help in determining applicable controls. Please follow installation instructions that accompany each heater.

Accessories:
Optional power controls pages 89-92.

Optional - ICP Control Panels

Features

- NEMA 4 outdoor rated control box
- Door interlock disconnect switch
- Custom made to customers specifications
- SCR and proportional controls optional
- Circuit breakers sized for heater load per stage
- See ICP page to select panel to control one or multiple units, if required

⚠ **WARNING:** This product can expose you to chemicals including nickel which is known to the State of California to cause cancer, and chromium, which is known to the State of California to cause birth defects and/or reproductive harm. For more information go to www.P65Warnings.ca.gov.

Overhead Infrared Heaters for Snow and Ice Control, Outdoor Spot Heating, and All Indoor Heating Applications

Product Description

AVAILABLE IN 2 OR 3 LAMP BANKERS BRONZE OR STAINLESS STEEL FINISH

- Listed for suspended, totally exposed (outdoor), high-bay (indoor) comfort heating and exterior snow & ice control applications
- Listed for recessed applications
- 20 gauge powder coated steel or stainless steel housings
- Gold anodized Aluminum reflectors & end caps
- 50% higher wattage densities for 3-element units
- 2-Lamp wiring, single phase
- 3-Lamp wiring, three or single phase
- Stainless steel models have non-corrosive housing, hardware and brackets; no ferrous metals used in the unit. Durable in harsh atmospheres & outdoor environments
- High temperature lead wires
- Clear 12mm diameter Quartz Lamp(s) Included
- Elements provide a bright light, generating 8-lumens per watt
- Made in U.S.A.

⚠ **WARNING:** This product can expose you to chemicals including nickel which is known to the State of California to cause cancer, and chromium, which is known to the State of California to cause birth defects and/or reproductive harm. For more information go to www.P65Warnings.ca.gov.

C ETL US LISTED Intertek

Features:
In-Built surface mounting brackets allows for fixture adjustment up to 45° horizontal tilt

In-built surface mounting brackets attached to the top wiring channel

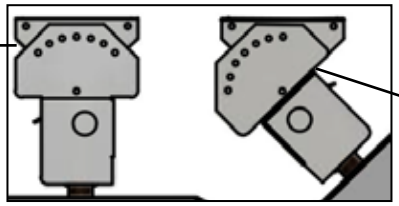

0 to 45° tilt @ 15° increments

Product Dimensions

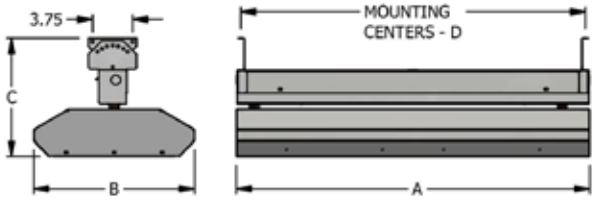

MUL-T-MOUNT SERIES	DIMENSIONS (IN.)			
	"A" LENGTH	"B" WIDTH	"C" HEIGHT	"D" MTG.CTR.
222	24"	15"	11"	23 ½"
223	24"	21 ½"	11"	23 ½"
342	33"	15"	11"	32 ½"
343	33"	21 ½"	11"	32 ½"
462	46"	15"	11"	45 ½"
463	46"	21 ½"	11"	45 ½"

Mounting Clearances & Recommended Mounting Height

Mounting Clearances		Recommended Mounting Height	
2 & 3 Lamp Models	3" from ceiling	30° Symmetric & A30° Asymmetric Reflector - Indoor	14' - 30'
	24" from vertical surface	60° Symmetric & A60° Asymmetric Reflector - Indoor	12' - 18'
2 Lamp Models	72" from face of heater to combustible surface	90° Symmetric Reflector - Indoor	8' - 12'
3 Lamp Models	96" from face of heater to combustible surface	30° Symmetric & A30° Asymmetric Reflector - Outdoor	8' - 10'

Reflector Patterns

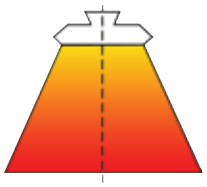

30° Symmetric

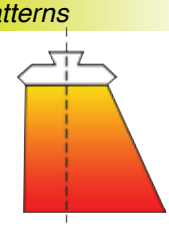

30° Asymmetric

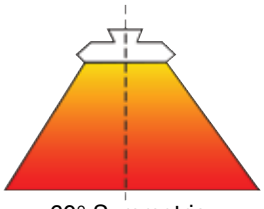

60° Symmetric

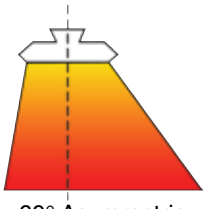

60° Asymmetric

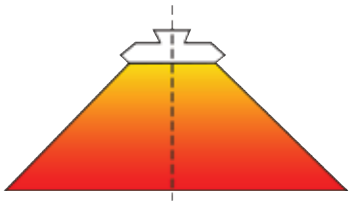

90° Symmetric

Product Specifications

Series:
222, 342, 462 (Painted Version) 2-lamp — TH Series
222, 342, 462 (Stainless Steel Version) 2-lamp — THSS Series
223, 343, 463 (Stainless Steel Version) 3-lamp — THSS Series

Housing:
20 gauge Galvanized Steel with baked on bankers bronze powder coated finish. *20 gauge Stainless Steel* for durability and corrosion-resistance. Both housings are ETL Listed for either indoor and totally exposed outdoor applications.

Reflectors and End Caps:
.040 Gold anodized Aluminum reflectors and end caps for superior reflectivity. Five choices of reflector patterns including 30 degree narrow (symmetric & asymmetric), 60 degree medium (symmetric & asymmetric), and 90 degree wide (symmetric). THSS models have stainless steel endcaps.

Elements:
Clear quartz lamps. Coiled tungsten filament located within a sealed quartz envelope, halogen filled, with porcelain end caps and 6" wire pigtail leads. Elements are 12mm in diameter and deliver a 96% radiant efficiency with high moisture and thermal shock resistance. Instantaneous heat-up and cool-down performance. Available wattages from 1600 to 3650 Watts per element. Available voltages from 208 to 600 Volts.

Controls:
Mul-T-Mount heaters are not manufactured with any control device on the unit. All controls are accessories and should be specified as such. Please consult the technical sales department of factory for help in determining applicable controls. Please follow installation instructions that accompany each heater.

Accessories:
Recessed mounting frames (painted or stainless steel), adjustable mounting brackets (stainless steel only), vertical mounting brackets (stainless steel only), wire guards, thermostats, snow detectors, SCR controllers, and power contactor panels (ICP Series).

Sizing Chart

Reflective Pattern (°)	Heater Output (kW)	# of Qtz. Lamps	Mounting Heights (FT.)							Watts Delivered per Square Foot						
			8	10	12	14	16	18	20	Mounting Heights (FT.)						
			Heat Pattern Coverage at Floor Level													
			L x W	L x W	L x W	L x W	L x W	L x W	L x W	8	10	12	14	16	18	20
30°	3.2	2 - Quartz Lamp Heaters	5.5 x 4	6.5 x 5.5	7.5 x 6.5	8.5 x 7.5	9.5 x 8.5	10.5 x 9.5	11.5 x 10.5	145.5	89.5	65.6	50.2	39.6	32.1	26.5
60°	3.2		10.5 x 9.5	13 x 12	15 x 14	17 x 16	N / R	N / R	N / R	32.1	20.5	15.2	11.8	-	-	-
90°	3.2		17 x 16	21 x 20	N / R	N / R				11.8	7.6	-	-	-	-	-
30°	5.0		6 x 4	7.5 x 5.5	8.5 x 6.5	9.5 x 7.5	10.5 x 8.5	11.5 x 9.5	12.5 x 10.5	208.3	121.2	90.5	70.2	56.0	45.8	38.1
60°	5.0		11.5 x 9.5	14 x 12	16 x 14	18 x 16	20.5 x 18.5	23 x 21	N / R	45.8	29.8	22.3	17.4	13.2	10.4	-
90°	5.0		18 x 16	22 x 20	26 x 24	N / R	N / R	N / R		17.4	11.4	8.0	-	-	-	-
30°	7.3		N / R	8.5 x 5.5	9.5 x 6.5	10.5 x 7.5	11.5 x 8.5	12.5 x 9.5	13.5 x 10.5	-	156.1	118.2	92.7	74.7	61.5	51.5
60°	7.3		12 x 10.5	15 x 12	17 x 14	19 x 16	21.5 x 18.5	24 x 21	N / R	57.9	40.6	30.7	24.0	18.4	14.5	-
90°	7.3		19 x 16	23 x 20	27 x 24	N / R	N / R	N / R		24.0	15.9	11.3	-	-	-	-
30°	4.8	3 - Quartz Lamp Heaters	5.5 x 5	6.5 x 6.5	7.5 x 7.5	8.5 x 8.5	9.5 x 9.5	10.5 x 10.5	11.5 x 11.5	174.5	113.6	85.3	66.4	53.2	43.5	36.3
60°	4.8		10.5 x 10.5	13 x 13	15 x 15	17 x 17	21 x 21	N / R	N / R	43.5	28.4	21.3	16.6	10.9	-	-
90°	4.8		17 x 17	21 x 21	N / R	N / R	N / R			16.6	10.9	-	-	-	-	-
30°	7.5		N / R	7.5 x 6.5	8.5 x 7.5	9.5 x 8.5	10.5 x 9.5	11.5 x 10.5	12.5 x 11.5	-	153.8	117.6	92.9	75.2	62.1	52.2
60°	7.5		11.5 x 10.5	14 x 13	16 x 15	18 x 17	20.5 x 19.5	23 x 22	N / R	62.1	41.2	31.3	24.5	18.8	14.8	-
90°	7.5		18 x 17	22 x 21	26 x 25	N / R	N / R	N / R		24.5	16.2	11.5	-	-	-	-
30°	10.95		N / R	8.5 x 6.5	9.5 x 7.5	10.5 x 8.5	11.5 x 9.5	12.5 x 10.5	13.5 x 11.5	-	198.2	153.7	122.7	100.2	83.4	70.5
60°	10.95		12 x 11	15 x 13	17 x 15	19 x 17	21.5 x 19.5	24 x 22	N / R	83.0	56.2	42.9	33.9	26.1	20.7	-
90°	10.95		19 x 17	23 x 21	27 x 25	N / R	N / R	N / R	N / R	33.9	22.7	16.2	-	-	-	-

NOTE: This chart provides the same heat pattern coverage for all Mul-T-Mount Heater Series regardless of housing materials, added sleeve, or element diameter.

Intertek

2-Lamp Mul-T-Mount Series Bankers Bronze Or Stainless Steel With (2) Clear 12mm Quartz Lamps Included

BRONZE HOUSING		STAINLESS STEEL HOUSING		KW	BTUs	VOLTS	REFLECTOR PATTERN	12 mm DIAMETER REPLACEMENT LAMP	WT. (LBS)
MFG CATALOG NUMBER	MFG MODEL NUMBER	MFG CATALOG NUMBER	MFG MODEL NUMBER						
04441602	222-30-TH-208V	04444002	222-30-THSS-208V	3.2	10,922	208	30° Symmetrical	63016209	20
04441702	222-30-TH-240V	04444102	222-30-THSS-240V			240		63016249	
04441802	222-30-TH-277V	04444202	222-30-THSS-277V			277		63016279	
04813802	222-30-TH-480V	04814302	222-30-THSS-480V			480		63016489	
04441902	222-A30-TH-208V	04444302	222-A30-THSS-208V			208	30° Asymmetrical	63016209	
04442002	222-A30-TH-240V	04444402	222-A30-THSS-240V			240		63016249	
04442102	222-A30-TH-277V	04444502	222-A30-THSS-277V			277		63016279	
04814102	222-A30-TH-480V	04814602	222-A30-THSS-480V			480		63016489	
04442202	222-60-TH-208V	04444602	222-60-THSS-208V			208	60° Symmetrical	63016209	
04442302	222-60-TH-240V	04444702	222-60-THSS-240V			240		63016249	
04442402	222-60-TH-277V	04444802	222-60-THSS-277V			277		63016279	
04813902	222-60-TH-480V	04814402	222-60-THSS-480V			480		63016489	
04442502	222-A60-TH-208V	04444902	222-A60-THSS-208V			208	60° Asymmetrical	63016209	
04442602	222-A60-TH-240V	04445002	222-A60-THSS-240V			240		63016249	
04442702	222-A60-TH-277V	04445102	222-A60-THSS-277V			277		63016279	
04814202	222-A60-TH-480V	04814702	222-A60-THSS-480V			480		63016489	
04432902	222-90-TH-208V	04445202	222-90-THSS-208V			208	90° Symmetrical	63016209	
04442802	222-90-TH-240V	04445302	222-90-THSS-240V			240		63016249	
04442902	222-90-TH-277V	04445402	222-90-THSS-277V			277		63016279	
04814002	222-90-TH-480V	04814502	222-90-THSS-480V			480		63016489	
04810802	342-30-TH-208V	04809302	342-30-THSS-208V	5.0	17,065	208	30° Symmetrical	63025209	25
04810902	342-30-TH-240V	04809402	342-30-THSS-240V			240		63025249	
88026143	342-30-TH-480V	88026394	342-30-THSS-480V			480		63025489	
04811702	342-A30-TH-208V	04810202	342-A30-THSS-208V			208	30° Asymmetrical	63025209	
04811802	342-A30-TH-240V	04810302	342-A30-THSS-240V			240		63025249	
04443102	342-A30-TH-480V	04445602	342-A30-THSS-480V			480		63025489	
04811102	342-60-TH-208V	---	---			208	60° Symmetrical	63025209	
04811202	342-60-TH-240V	04809702	342-60-THSS-240V			240		63025249	
88029143	342-60-TH-480V	88029394	342-60-THSS-480V			480		63025489	
04812002	342-A60-TH-208V	04810502	342-A60-THSS-208V			208	60° Asymmetrical	63025209	
04812102	342-A60-TH-240V	04810602	342-A60-THSS-240V			240		63025249	
04443302	342-A60-TH-480V	04445802	342-A60-THSS-480V			480		63025489	
04811402	342-90-TH-208V	04809902	342-90-THSS-208V			208	90° Symmetrical	63025209	
04811502	342-90-TH-240V	04810002	342-90-THSS-240V			240		63025249	
88032144	342-90-TH-480V	88032394	342-90-THSS-480V			480		63025489	
88027143	462-30-TH-480V	88027393	462-30-THSS-480V	7.3	24,915	480	30° Symmetrical	63036489	32
04443602	462-A30-TH-480V	04446102	462-A30-THSS-480V				30° Asymmetrical	63036489	
88030143	462-60-TH-480V	88030393	462-60-THSS-480V				60° Symmetrical	63036489	
04443802	462-A60-TH-480V	04446302	462-A60-THSS-480V				60° Asymmetrical	63036489	
88033144	462-90-TH-480V	88033394	462-90-THSS-480V				90° Symmetrical	63036489	

NOTE: Consult the factory, the product instruction manual, or a licensed electrician for 3-phase wiring of all 2-element heaters.

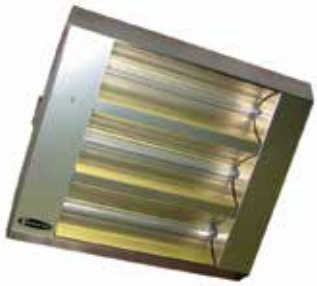

3-Lamp Mul-T-Mount Series - Bankers Bronze Or Stainless Steel Housing With (3) Clear 12mm Quartz Lamps Included

Intertek

WARNING: This product can expose you to chemicals including nickel which is known to the State of California to cause cancer, and chromium, which is known to the State of California to cause birth defects and/or reproductive harm. For more information go to www.P65Warnings.ca.gov.

- 600-Volt Models also available, contact factory for more information
- Asymmetrical pattern units are also available for 30° & 60°
- Made in U.S.A.

BRONZE HOUSING		STAINLESS STEEL HOUSING		KW	BTUs	VOLTS	REFLECTOR PATTERN	12 mm DIAMETER REPLACEMENT LAMP	WT. (LBS)
MFG CATALOG NUMBER	MFG MODEL NUMBER	MFG CATALOG NUMBER	MFG MODEL NUMBER						
04874802	223-30-TH-208V	04436702	223-30-THSS-208V	4.8	16382	208	30° Symmetrical	63016209	25
04874902	223-30-TH-240V	04436802	223-30-THSS-240V			240		63016249	
04875002	223-30-TH-277V	04436902	223-30-THSS-277V			277		63016279	
04875102	223-30-TH-480V	04815802	223-30-THSS-480V			480		63016489	
04875202	223-60-TH-208V	04432802	223-60-THSS-208V			208	60° Symmetrical	63016209	
04875302	223-60-TH-240V	04437302	223-60-THSS-240V			240		63016249	
04875402	223-60-TH-277V	04437402	223-60-THSS-277V			277		63016279	
04875502	223-60-TH-480V	04815902	223-60-THSS-480V			480		63016489	
04875602	223-90-TH-208V	04437802	223-90-THSS-208V			208	90° Symmetrical	63016209	
04875702	223-90-TH-240V	04437902	223-90-THSS-240V			240		63016249	
04875802	223-90-TH-277V	04438002	223-90-THSS-277V			277		63016279	
04875902	223-90-TH-480V	04816002	223-90-THSS-480V			480		63016489	
04876002	343-30-TH-208V	04812302	343-30-THSS-208V	7.5	25298	208	30° Symmetrical	63025209	33
04876102	343-30-TH-240V	04812402	343-30-THSS-240V			240		63025249	
04876202	343-30-TH-480V	088114394	343-30-THSS-480V			480		63025489	
04876302	343-60-TH-208V	04812602	343-60-THSS-208V			208	60° Symmetrical	63025209	
04876402	343-60-TH-240V	04812702	343-60-THSS-240V			240		63025249	
04876502	343-60-TH-480V	088116394	343-60-THSS-480V			480		63025489	
04876602	343-90-TH-208V	04812902	343-90-THSS-208V			208	90° Symmetrical	63025209	
04876702	343-90-TH-240V	04813002	343-90-THSS-240V			240		63025249	
04876802	343-90-TH-480V	088118394	343-90-THSS-480V			480		63025489	
04876902	463-30-TH-480V	088105394	463-30-THSS-480V	10.95	37372	480	30° Symmetrical	63036489	41
04877002	463-60-TH-480V	088107394	463-60-THSS-480V				60° Symmetrical	63036489	
04877102	463-90-TH-480V	088109394	463-90-THSS-480V				90° Symmetrical	63036489	

TH & THSS Series Product Accessories

MFG CATALOG NUMBER	MFG MODEL NUMBER	DESCRIPTION		FOR USE WITH	WT.(LBS)
08811239	VMB-41-SS	Wall Mounting Brackets (2)		All Mul-T-Mount Models	12
08511500	CHWG-222	Stainless Steel Wire Guards		222 Series	2
08511400	CHWG-342			342 Series	
08516200	CHWG-462			462 Series	
08543600	CHWG-223			223 Series	
08543500	CHWG-343			343 Series	
08543400	CHWG-463			463 Series	
		Recessed Mounting Frames (UL)			
		Ceiling Cutout (in.)	Frame Size (in.)		
04419902	RMF-222-SS-A	27 x 17 ⅞	29 ⅛ x 20	222 Series Stainless	6
04494402	RMF-222-A	27 x 17 ⅞	29 ⅛ x 20	222 Series Painted	
04420702	RMF-342-SS-A	36 x 17 ⅞	38 ⅛ x 20	342 Series Stainless	9
04418702	RMF-342-A	36 x 17 ⅞	38 ⅛ x 20	342 Series Painted	
04421002	RMF-462-SS-A	49 x 17 ⅞	51 ⅛ x 20	462 Series Stainless	11
04494502	RMF-462-A	49 x 17 ⅞	51 ⅛ x 20	462 Series Painted	
08811002	RMF-223-SS	32 x 29 ⅜	34 ⅛ x 31 ½	223 Series Stainless	15
08811302	RMF-343-SS	41 x 29 ⅜	43 ⅛ x 31 ½	343 Series Stainless	18
08811102	RMF-463-SS	54 x 29 ⅜	56 ⅛ x 31 ½	463 Series Stainless	20
04877202	RMF-223	32 x 29 ⅜	34 ⅛ x 31 ½	223 Series Painted	15
04877302	RMF-343	41 x 29 ⅜	43 ⅛ x 31 ½	343 Series Painted	18
04877402	RMF-463	54 x 29 ⅜	56 ⅛ x 31 ½	463 Series Painted	20
04407802	31939009	Red Vycor Sleeves Reduces 12mm Clear Quartz Lamp Brightness by 90%		All 1600W Qtz. Lamp	2
04407302	31940009			All 2500W Qtz. Lamp	
04407402	31941009			All 3650W Qtz. Lamp	
04461502	632-1620	Red Quartz Lamps; 1.6kw, 208v		222, 223 & RPH Series	2
04461602	632-1624	Red Quartz Lamps; 1.6kw, 240v			
04462202	632-2548	Red Quartz Lamps; 2.5kw, 480v		342 & 343 Series	

Intertek

2-Lamp Mul-T-Mount Series - Bankers Bronze Or Stainless Steel
With (2) Clear 8mm Quartz Lamps and Amber Gray Sleeves Included

BROWN HOUSING		STAINLESS STEEL HOUSING		KW	BTUs	VOLTS	REFLECTOR PATTERN	8mm DIAMETER REPLACEMENT LAMP	WT. (LBS)
MFG CATALOG NUMBER	MFG MODEL NUMBER	MFG CATALOG NUMBER	MFG MODEL NUMBER						
04900002	222-30-TH-208V-AG	04904002	222-30-THSS-208V-AG	3.2	10,922	208	30° Symmetrical	04912802	20
04900102	222-30-TH-240V-AG	04904102	222-30-THSS-240V-AG			240		04912902	
04900202	222-30-TH-277V-AG	04904202	222-30-THSS-277V-AG			277		04913002	
04900302	222-30-TH-480V-AG	04904302	222-30-THSS-480V-AG			480		04913102	
04900402	222-A30-TH-208V-AG	04904402	222-A30-THSS-208V-AG			208	30° Asymmetrical	04912802	
04900502	222-A30-TH-240V-AG	04904502	222-A30-THSS-240V-AG			240		04912902	
04900602	222-A30-TH-277V-AG	04904602	222-A30-THSS-277V-AG			277		04913002	
04900702	222-A30-TH-480V-AG	04904702	222-A30-THSS-480V-AG			480		04913102	
04900802	222-60-TH-208V-AG	---	---			208	60° Symmetrical	04912802	
04900902	222-60-TH-240V-AG	04904902	222-60-THSS-240V-AG			240		04912902	
04901002	222-60-TH-277V-AG	04905002	222-60-THSS-277V-AG			277		04913002	
04901102	222-60-TH-480V-AG	04905102	222-60-THSS-480V-AG			480		04913102	
04901202	222-A60-TH-208V-AG	04905202	222-A60-THSS-208V-AG			208	60° Asymmetrical	04912802	
04901302	222-A60-TH-240V-AG	04905302	222-A60-THSS-240V-AG			240		04912902	
04901402	222-A60-TH-277V-AG	04905402	222-A60-THSS-277V-AG			277		04913002	
04901502	222-A60-TH-480V-AG	04905502	222-A60-THSS-480V-AG			480		04913102	
04901602	222-90-TH-208V-AG	04905602	222-90-THSS-208V-AG			208	90° Symmetrical	04912802	
04901702	222-90-TH-240V-AG	04905702	222-90-THSS-240V-AG			240		04912902	
04901802	222-90-TH-277V-AG	04905802	222-90-THSS-277V-AG			277		04913002	
04901902	222-90-TH-480V-AG	04905902	222-90-THSS-480V-AG			480		04913102	
04902002	342-30-TH-208V-AG	04906002	342-30-THSS-208V-AG	5.0	17,065	208	30° Symmetrical	04913202	25
04902102	342-30-TH-240V-AG	04906102	342-30-THSS-240V-AG			240		04913302	
04902202	342-30-TH-480V-AG	04906202	342-30-THSS-480V-AG			480		04913502	
04902302	342-A30-TH-208V-AG	04906302	342-A30-THSS-208V-AG			208	30° Asymmetrical	04913202	
04902402	342-A30-TH-240V-AG	04906402	342-A30-THSS-240V-AG			240		04913302	
04902502	342-A30-TH-480V-AG	04906502	342-A30-THSS-480V-AG			480		04913502	
04902602	342-60-TH-208V-AG	04906602	342-60-THSS-208V-AG			208	60° Symmetrical	04913202	
04902702	342-60-TH-240V-AG	04906702	342-60-THSS-240V-AG			240		04913302	
04902802	342-60-TH-480V-AG	04906802	342-60-THSS-480V-AG			480		04913502	
04902902	342-A60-TH-208V-AG	04906902	342-A60-THSS-208V-AG			208	60° Asymmetrical	04913202	
04903002	342-A60-TH-240V-AG	04907002	342-A60-THSS-240V-AG			240		04913302	
04903102	342-A60-TH-480V-AG	04907102	342-A60-THSS-480V-AG			480		04913502	
04903202	342-90-TH-208V-AG	04907202	342-90-THSS-208V-AG			208	90° Symmetrical	04913202	
04903302	342-90-TH-240V-AG	04907302	342-90-THSS-240V-AG			240		04913302	
04903402	342-90-TH-480V-AG	04907402	342-90-THSS-480V-AG			480		04913502	
04903502	462-30-TH-480V-AG	04907502	462-30-THSS-480V-AG	7.3	24,915	480	30° Symmetrical	04913602	32
04903602	462-A30-TH-480V-AG	04907602	462-A30-THSS-480V-AG				30° Asymmetrical	04913602	
04903702	462-60-TH-480V-AG	04907702	462-60-THSS-480V-AG				60° Symmetrical	04913602	
04903802	462-A60-TH-480V-AG	04907802	462-A60-THSS-480V-AG				60° Asymmetrical	04913602	
04903902	462-90-TH-480V-AG	04907902	462-90-THSS-480V-AG				90° Symmetrical	04913602	

NOTE: Consult the factory, the product instruction manual, or a licensed electrician for 3-phase wiring of all 2-element heaters.

TH & THSS Series Mul-T-Mount Electric Infrared Heater

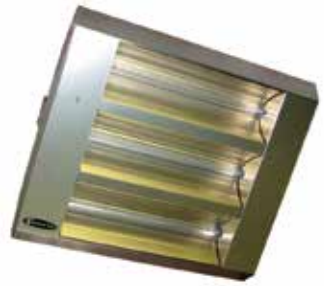

3-Lamp Mul-T-Mount Series - Bankers Bronze Or Stainless Steel Housing With (3) Clear 8mm Quartz Lamps and Amber Gray Sleeves Included

Intertek

WARNING: This product can expose you to chemicals including nickel which is known to the State of California to cause cancer, and chromium, which is known to the State of California to cause birth defects and/or reproductive harm. For more information go to www.P65Warnings.ca.gov.

- Heaters shipped with glare reducing sleeves & elements
- Asymmetrical pattern units are also available for 30° & 60°
- Made in U.S.A.

BROWN HOUSING		STAINLESS STEEL HOUSING		KW	BTUs	VOLTS	REFLECTOR PATTERN	8mm DIAMETER REPLACEMENT LAMP	WT. (LBS)
MFG CATALOG NUMBER	MFG MODEL NUMBER	MFG CATALOG NUMBER	MFG MODEL NUMBER						
04908002	223-30-TH-208V-AG	04910402	223-30-THSS-208V-AG	4.8	16,382	208	30° Symmetrical	04912802	25
04908102	223-30-TH-240V-AG	04910502	223-30-THSS-240V-AG			240		04912902	
04908202	223-30-TH-277V-AG	04910602	223-30-THSS-277V-AG			277		04913002	
04908302	223-30-TH-480V-AG	04910702	223-30-THSS-480V-AG			480		04913102	
04908402	223-60-TH-208V-AG	04910802	223-60-THSS-208V-AG			208	60° Symmetrical	04912802	
04908502	223-60-TH-240V-AG	04910902	223-60-THSS-240V-AG			240		04912902	
04908602	223-60-TH-277V-AG	04911002	223-60-THSS-277V-AG			277		04913002	
04908702	223-60-TH-480V-AG	04911102	223-60-THSS-480V-AG			480		04913102	
04908802	223-90-TH-208V-AG	04911202	223-90-THSS-208V-AG			208	90° Symmetrical	04912802	
04908902	223-90-TH-240V-AG	04911302	223-90-THSS-240V-AG			240		04912902	
04909002	223-90-TH-277V-AG	04911402	223-90-THSS-277V-AG			277		04913002	
04909102	223-90-TH-480V-AG	04911502	223-90-THSS-480V-AG			480		04913102	
04909202	343-30-TH-208V-AG	04911602	343-30-THSS-208V-AG	7.5	25,298	208	30° Symmetrical	04913202	33
04909302	343-30-TH-240V-AG	04911702	343-30-THSS-240V-AG			240		04913302	
04909402	343-30-TH-480V-AG	04911802	343-30-THSS-480V-AG			480		04913502	
04909502	343-60-TH-208V-AG	04911902	343-60-THSS-208V-AG			208	60° Symmetrical	04913202	
04909602	343-60-TH-240V-AG	04912002	343-60-THSS-240V-AG			240		04913302	
04909702	343-60-TH-480V-AG	04912102	343-60-THSS-480V-AG			480		04913502	
04909802	343-90-TH-208V-AG	04912202	343-90-THSS-208V-AG			208	90° Symmetrical	04913202	
04909902	343-90-TH-240V-AG	04912302	343-90-THSS-240V-AG			240		04913302	
04910002	343-90-TH-480V-AG	04912402	343-90-THSS-480V-AG			480		04913502	
04910102	463-30-TH-480V-AG	04912502	463-30-THSS-480V-AG	10.95	37,372	480	30° Sym.	04913602	41
04910202	463-60-TH-480V-AG	04912602	463-60-THSS-480V-AG				60° Sym.	04913602	
04910302	463-90-TH-480V-AG	04912702	463-90-THSS-480V-AG				90° Sym.	04913602	

TH & THSS Series Replacement Lamps & Sleeves

MFG CATALOG NUMBER	MFG MODEL NUMBER	DESCRIPTION	WT.(LBS)
8MM REPLACEMENT LAMPS			
04912802	59129101	8mm 1600W, 208V LAMP	3
04912902	59129102	8mm 1600W, 240V LAMP	
04913002	59129103	8mm 1600W, 277V LAMP	
04913102	59129104	8mm 1600W, 480V LAMP	
04913202	59129105	8mm 2500W, 208V LAMP	5
04913302	59129106	8mm 2500W, 240V LAMP	
04913402	59129107	8mm 2500W, 277V LAMP	
04913502	59129108	8mm 2500W, 480V LAMP	
04913602	59129009	8mm 3650W, 480V LAMP	
AMBER GRAY SLEEVE ONLY			
04891102	59111102	AMBER GRAY SLEEVE FOR 1600 WATT MODELS	2
04891202	59111103	AMBER GRAY SLEEVE FOR 2500 WATT MODELS	
04891302	59111106	AMBER GRAY SLEEVE FOR 3650 WATT MODELS	
OPTIONAL 8MM AMBER GRAY SLEEVE / LAMP KIT* (kits can be used as replacements for any existing Mul-T-Mount fixture)			
04899202	AGS1620	1600 W 208 V 8mm AMBER GRAY SLEEVE / LAMP KIT	5
04899302	AGS1624	1600 W 240 V 8mm AMBER GRAY SLEEVE / LAMP KIT	
04899402	AGS1627	1600 W 277 V 8mm AMBER GRAY SLEEVE / LAMP KIT	
04899502	AGS1648	1600 W 480 V 8mm AMBER GRAY SLEEVE / LAMP KIT	
04899602	AGS2520	2500 W 208 V 8mm AMBER GRAY SLEEVE / LAMP KIT	8
04899702	AGS2524	2500 W 240 V 8mm AMBER GRAY SLEEVE / LAMP KIT	
04899802	AGS2548	2500 W 480 V 8mm AMBER GRAY SLEEVE / LAMP KIT	
04899902	AGS3648	3650 W 480 V 8mm AMBER GRAY SLEEVE / LAMP KIT	

**2 Lamp fixtures require 2 kits; 3 Lamp fixtures require 3 kits*
600 Volt models not available

3-Lamp Mul-T-Mount Series - Nickel Gray Housing With (3) Clear 8mm Quartz Lamps and Amber Gray Sleeves Included

Heavy Duty Extruded Aluminum Housing

Glare Reduction Element & Sleeve Combination Heater Series

Intertek

WARNING: This product can expose you to chemicals including nickel which is known to the State of California to cause cancer, and chromium, which is known to the State of California to cause birth defects and/or reproductive harm. For more information go to www.P65Warnings.ca.gov.

- ETL C/US listed for suspended, totally exposed outdoor and indoor spot comfort heating applications, including exterior snow/ice control applications
- Clear quartz lamp heating elements, offered in both 2-lamp and 3-lamp heaters that operate on 208, 240, or 480 volt
- Gold anodized one-piece reflector offered in 30°, 60°, or 90° symmetrical patterns for various distribution of infrared heat
- 6063 extruded aluminum housing, with a painted powder coated nickel gray finish
- Housing is extremely durable and attractively designed for commercial applications
- All 3-lamp heaters wire for either single or three-phase wiring.
- 2-lamp heaters wire for single-phase operation
- Includes surface mounting brackets & glare reducing sleeves to eliminate 94% of the quartz lamp lumen output
- Made in the USA

NICKEL GRAY HOUSING		KW	BTUs	VOLTS	REFLECTOR PATTERN	8mm DIAMETER REPLACEMENT LAMP	WT. (LBS)
MFG CATALOG NUMBER	MFG MODEL NUMBER						
04896202	223-30-THA-208V	4.8	16382	208	30° Symmetrical	04912802	25
04896302	223-30-THA-240V			240		04912902	
04896402	223-30-THA-277V			277		04913002	
04896502	223-30-THA-480V			480		04913102	
04896602	223-60-THA-208V			208	60° Symmetrical	04912802	
04896702	223-60-THA-240V			240		04912902	
04896802	223-60-THA-277V			277		04913002	
04896902	223-60-THA-480V			480		04913102	
04897002	223-90-THA-208V			208	90° Symmetrical	04912802	
04897102	223-90-THA-240V			240		04912902	
04897202	223-90-THA-277V			277		04913002	
04897302	223-90-THA-480V			480		04913102	
04897402	343-30-THA-208V	7.5	25298	208	30° Symmetrical	04913202	33
04897502	343-30-THA-240V			240		04913302	
04897602	343-30-THA-480V			480		04913502	
04897702	343-60-THA-208V			208	60° Symmetrical	04913202	
04897802	343-60-THA-240V			240		04913302	
04897902	343-60-THA-480V			480		04913502	
04898002	343-90-THA-208V			208	90° Symmetrical	04913202	
04898102	343-90-THA-240V			240		04913302	
04898202	343-90-THA-480V			480		04913502	
04898302	463-30-THA-480V	10.95	37372	480	30° Symmetrical	04913602	41
04898402	463-60-THA-480V				60° Symmetrical	04913602	
04898502	463-90-THA-480V				90° Symmetrical	04913602	

NOTE:

- All THA models have the same housing dimensions and require the same mounting clearances as the TH/THSS models; see page 76
- See page 77 for sizing chart information
- Asymmetrical pattern units are also available for 30° & 60°, contact factory for more information

2-Lamp Mul-T-Mount Series Nickel Gray With
(2) Clear 8mm Quartz Lamps and Amber Gray Sleeves Included

NICKEL GRAY HOUSING		KW	BTUs	VOLTS	REFLECTOR PATTERN	8mm DIAMETER REPLACEMENT LAMP	WT. (LBS)
MFG CATALOG NUMBER	MFG MODEL NUMBER						
04892202	222-30-THA-208V	3.2	10,922	208	30° Symmetrical	04912802	20
04892302	222-30-THA-240V			240		04912902	
04892402	222-30-THA-277V			277		04913002	
04892502	222-30-THA-480V			480		04913102	
04892602	222-A30-THA-208V			208	30° Asymmetrical	04912802	
04892702	222-A30-THA-240V			240		04912902	
04892802	222-A30-THA-277V			277		04913002	
04892902	222-A30-THA-480V			480		04913102	
04893002	222-60-THA-208V			208	60° Symmetrical	04912802	
04893102	222-60-THA-240V			240		04912902	
04893202	222-60-THA-277V			277		04913002	
04893302	222-60-THA-480V			480		04913102	
04893402	222-A60-THA-208V			208	60° Asymmetrical	04912802	
04893502	222-A60-THA-240V			240		04912902	
04893602	222-A60-THA-277V			277		04913002	
04893702	222-A60-THA-480V			480		04913102	
04893802	222-90-THA-208V			208	90° Symmetrical	04912802	
04893902	222-90-THA-240V			240		04912902	
04894002	222-90-THA-277V			277		04913002	
04894102	222-90-THA-480V			480		04913102	
04894202	342-30-THA-208V	5.0	17,065	208	30° Symmetrical	04913202	25
04894302	342-30-THA-240V			240		04913302	
04894402	342-30-THA-480V			480		04913502	
04894502	342-A30-THA-208V			208	30° Asymmetrical	04913202	
04894602	342-A30-THA-240V			240		04913302	
04894702	342-A30-THA-480V			480		04913502	
04894802	342-60-THA-208V			208	60° Symmetrical	04913202	
04894902	342-60-THA-240V			240		04913302	
04895002	342-60-THA-480V			480		04913502	
04895102	342-A60-THA-208V			208	60° Asymmetrical	04913202	
04895202	342-A60-THA-240V			240		04913302	
04895302	342-A60-THA-480V			480		04913502	
04895402	342-90-THA-208V			208	90° Symmetrical	04913202	
04895502	342-90-THA-240V			240		04913302	
04895602	342-90-THA-480V			480		04913502	
04895702	462-30-THA-480V	7.3	24,915	480	30° Symmetrical	04913602	32
04895802	462-A30-THA-480V				30° Asymmetrical	04913602	
04895902	462-60-THA-480V				60° Symmetrical	04913602	
04896002	462-A60-THA-480V				60° Asymmetrical	04913602	
04896102	462-90-THA-480V				90° Symmetrical	04913602	

NOTE: Consult the factory, the product instruction manual, or a licensed electrician for 3-phase wiring of all 2-element heaters.

Optional THA Wire Guards

MFG CATALOG NUMBER	MFG MODEL NUMBER
04898602	THA222 GUARD
04898702	THA223 GUARD
04898802	THA342 GUARD
04898902	THA343 GUARD
04899002	THA462 GUARD
04899102	THA463 GUARD

Heats solid objects, not the air!

Intertek

⚠ **WARNING:** This product can expose you to chemicals including nickel which is known to the State of California to cause cancer, and chromium, which is known to the State of California to cause birth defects and/or reproductive harm. For more information go to www.P65Warnings.ca.gov.

Features

- Frosted Quartz Tube heating element (included)
- Listed for suspended, totally exposed (outdoor) and indoor spot heating applications
- Finish: High-temp brown powder coated finish or corrosion resistant stainless steel 24 gauge housing
- 60° Symmetric Heat Pattern
- Gold anodized Aluminum reflector and end caps
- Painted models are direct wire, unless specified and are supplied with 6” lead wires for field connection in the internal wiring compartment. These models are available with a factory installed 6’ cord set. The 208V model must have a field supplied plug.
- Stainless steel models include an electrical enclosure assembled to the end of the heater housing and (2) 6” long lead wires for direct field connection.
- Two 2’ ft. long mounting chains and four S-Hooks included
- The OCH-Series can be surfaced mounted using the supplied mounting brackets which allow up to a 45° horizontal tilt adjustment.
- Made in U.S.A.

Product Models

FINISH - BROWN		FINISH - STAINLESS Steel		CONNECTION TYPE	WATTS	BTUs	VOLTS	AMPS	Qtz. Tube Repl. Element	WT. (LBS)
Includes Electrical Enclosure										
MFG CATALOG NUMBER	MFG MODEL NUMBER	MFG CATALOG NUMBER	MFG MODEL NUMBER							
04804402	OCH-46-120VE	04805202	OCH-46-120V-SSE	Hard Wire	1500	5120	120	12.5	671-3784	10
04804502	OCH-46-208VE	04805302	OCH-46-208V-SSE		2000	6826	208	9.6	671-5061	
04804602	OCH-46-240VE	04805402	OCH-46-240V-SSE		2000	6826	240	8.3	671-3785	
04804702	OCH-46-277VE	04805502	OCH-46-277V-SSE		2000	6826	277	7.2	671-5018	
04804902	OCH-57-208VE	04805702	OCH-57-208V-SSE		3000	10239	208	14.4	671-5060	12
04804802	OCH-57-240VE	04805602	OCH-57-240V-SSE		3000	10239	240	12.5	671-3786	
04805002	OCH-57-277VE	04805802	OCH-57-277V-SSE		3000	10239	277	10.8	671-5059	
04805102	OCH-57-480VE	04805902	OCH-57-480V-SSE		2250	7679	480	4.7	671-5058	
04859702	OCH-46-120VCE	---	---	Corded	1500	5120	120	12.5	671-3784	11
04859802	OCH-57-208VCE	---	---		3000	10239	208	14.4	671-5061	13
04859902	OCH-57-240VCE	---	---		3000	10239	240	12.5	671-3786	

Product Accessories

MFG CATALOG NUMBER	MFG MODEL NUMBER	DESCRIPTION	FOR USE WITH	WT. (LBS)
04808802	OCHWG-46	Stainless Steel Wire Guards	OCH-46 Series Models	2
04808902	OCHWG-57		OCH-57 Series Models	2
08811239	VMB-41-SS	Wall Mtg. Brackets (2)	ALL OCH Models	12
04459402	VHC-15	Variable Heat Controller	120/208/240V OCH Models Only	3
04853502	VHC-32	Variable Heat Controller	208/240V OCH Models Only	3

OCH / OCH2 Sizing Chart

MOUNTING HEIGHT	HEATER MFG MODEL	WATTS	HEAT PATTERN COVERAGE (AT FLOOR LEVEL)			TOTAL WATTS / SQ. FT.
			LENGTH	WIDTH	SQ. FT.	
7’	OCH-46	1500	11	9	99	15.2
		2000	11	9	99	20.2
8’	OCH-46	1500	12	10	120	12.5
		2000	12	10	120	16.7
	OCH-57	3000	13	10	130	23.1
		2250	13	10	130	17.3
	OCH2-55	4000	16	10	160	25.0
	OCH2-66	6000	17	10	170	35.3
9’	OCH-46	1500	13	11	143	10.5
		2000	13	11	143	14.0
	OCH-57	3000	14	11	154	19.5
		2250	14	11	154	14.6
10’	OCH-57	3000	15	12	180	16.7
		2250	15	12	180	12.5
	OCH2-55	4000	19	13	247	16.2
	OCH2-66	6000	20	13	260	23.0
12’	OCH-57	3000	17	14	238	12.6
		2250	17	14	238	9.5
	OCH2-55	4000	22	15	330	12.1
	OCH2-66	6000	23	15	345	17.4
14’	OCH2-55	4000	25	17	425	9.4
	OCH2-66	6000	26	17	442	13.6

Product Specifications

Series: **Dimensions:**
OCH-46 Length: 48”; Width: 5.375”; Height: 6.5”
OCH-57 Length: 59”; Width: 5.375”; Height: 6.5”

Housing:
24 gauge Aluminized Steel with a baked on brown powder coat finish. Housing is cETLus Listed for indoor or outdoor applications. Horizontal mounting only.

Reflectors and End Caps:
.040 Gold anodized Aluminum reflectors and end caps for superior reflectiveness. 60 degree medium (symmetric) pattern only.

Elements:
Quartz Tubes. Frosted quartz envelope with a Nickel-Chromium coiled filament, porcelain end caps, and threaded-screw (stud) terminations. Fast heat-up and cool-down performance. Available Wattages from 1500 to 3000 Watts per element. Available voltages from 120 to 480 Volts.

Controls:
OCH Series heaters are not manufactured with any control device on the unit. All controls are accessories and should be specified as such. Please consult the technical sales department of factory for help in determining applicable controls. Please follow installation instructions that accompany each heater.

Accessories:
Adjustable mounting brackets (stainless steel only), vertical mounting brackets (stainless steel only), wire guards, thermostats, SCR controllers, and power contactor panels.

Mounting Configurations & Reflector Pattern

Mounting
- Chain, surface mount or use our vertical mounting bracket as shown below. Note: All units must be mounted horizontally.
- In-Built surface mounting bracket allows for fixture adjustment up to a 45° horizontal tilt.
- As shown, the heater may be suspended at any horizontal angle desired.

Chain Mount:
(Chain supplied)

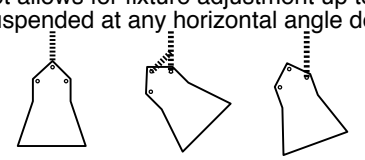

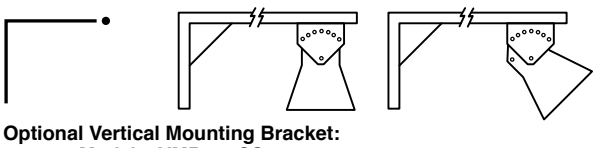

Optional Vertical Mounting Bracket:
Model # VMB-41-SS

Reflector Pattern:

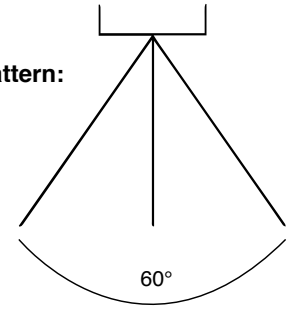

Mounting Clearances & Recommended Mounting Height

MOUNTING CLEARANCES	RECOMMENDED MOUNTING HEIGHT	
3” from ceiling; 12” from vertical surface 72” from face of heater to combustible surface 36” from another heater	OCH-46	7’-9’
	OCH-57	8’-10’

OCH2 Series Outdoor / Indoor Rated Quartz Electric Infrared Heater

Heats solid objects, not the air!

Features

- 2 Frosted Quartz Tube heating elements (included)
- Listed for suspended, totally exposed (outdoor) and indoor** spot heating applications
- Finish: High-temp brown powder coated finish or corrosion resistant stainless steel 20 gauge housing
- 60° Symmetric Heat Pattern
- Gold anodized Aluminum reflector and end caps
- 6” long lead wires for direct field connection
- Two 2’ ft. long mounting chains and four S-Hooks included
- The OCH2-Series can be wall or ceiling mounted using the supplied mounting brackets which allow up to a 45° horizontal tilt adjustment
- Made in U.S.A.

Series:	**Dimensions:**
OCH2-55	Length: 55”; Width: 7.5”; Height: 7”
OCH2-66	Length: 66”; Width: 7.5”; Height: 7”

Product Models

MFG CATALOG NUMBER	PAINTED BROWN MFG MODEL NUMBER	MFG CATALOG NUMBER	STAINLESS STEEL MFG MODEL NUMBER	WATTS	BTUs	VOLTS	AMPS	Qtz. Tube Repl. Element
04915502	OCH2-55-208V	04915902	OCH2-55-208V-SS	4000	13652	208	19.23	671-5062
04915602	OCH2-55-240V	04916002	OCH2-55-240V-SS			240	16.67	671-5063
04915702	OCH2-55-277V	04916102	OCH2-55-277V-SS			277	14.44	671-5064
04915802	*OCH2-55-480V	04916202	*OCH2-55-480V-SS			480	8.33	*671-5063
04916302	OCH2-66-208V	04916702	OCH2-66-208V-SS	6000	20478	208	28.85	671-5065
04916402	OCH2-66-240V	04916802	OCH2-66-240V-SS			240	25	671-5066
04916502	OCH2-66-277V	04916902	OCH2-66-277V-SS			277	21.66	671-5067
04916602	*OCH2-66-480V	04917002	*OCH2-66-480V-SS			480	12.5	*671-5066

*480V models use (2) 240V elements wired in series. **Not for residential use

Product Accessories

MFG CATALOG NUMBER	MFG MODEL NUMBER	DESCRIPTION	FOR USE WITH
04917102	OCH2WG-55	Wire Guards	OCH2-55 Series Models
04917202	OCH2WG-66		OCH2-66 Series Models

Mounting Configurations & Reflector Pattern

Mounting

- Chain, surface mount or use our vertical mounting bracket as shown below. Note: All units must be mounted horizontally.
- In-Built surface mounting bracket allows for fixture adjustment up to a 45° horizontal tilt.
- As shown, the heater may be suspended at any horizontal angle desired.

Chain Mount:
(Chain supplied)

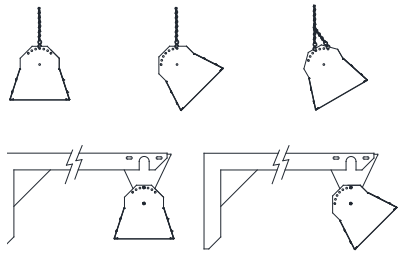

Optional Vertical Mounting Bracket:
Model # VMB-41-SS

Reflector Pattern:

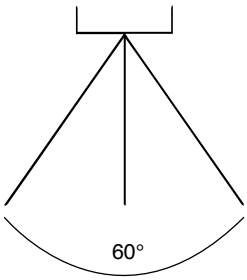

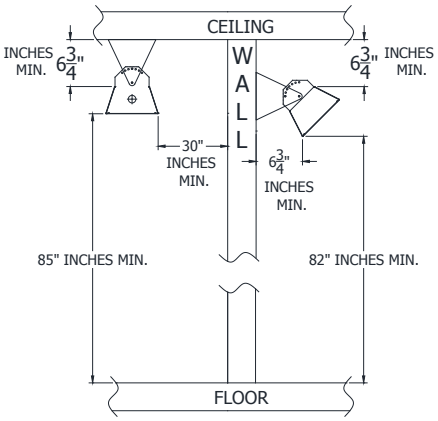

Mounting Clearances & Recommended Mounting Height

MOUNTING CLEARANCES	RECOMMENDED MOUNTING HEIGHT	
6-3/4” from ceiling; 30” from vertical surface 85” from face of heater to combustible surface 36” from another heater	OCH2-55	9’-11’
	OCH2-66	10’-12’

RPH Series Outdoor Rated Stainless Steel Electric Infrared Heater

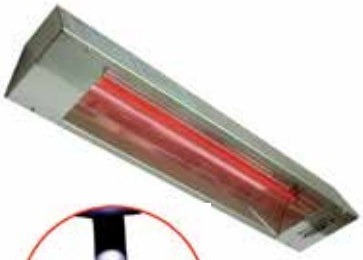

Mounting Plate (provided) on top center allows heater to be mounted parallel or angled using a standard pipe nipple and box cover (supplied by installer)

- Instant, high-intensity radiant heat, with 30° symmetric heat pattern
- Listed for indoor spot heating and for outdoor unprotected applications
- Specialized Ruby "Red" Quartz Lamp infrared heating element for glare reduction
- Stainless Steel housing with Coilzak Aluminum reflector for good reflectivity & corrosion resistance
- Heating element and mounting plate included
- Dimensions: 24" x 5 ⅜" x 4 ½."
- Made in U.S.A.

Intertek

⚠WARNING: This product can expose you to chemicals including nickel which is known to the State of California to cause cancer, and chromium, which is known to the State of California to cause birth defects and/or reproductive harm. For more information go to www.P65Warnings.ca.gov.

MOUNTING CLEARANCES	RECOMMENDED MOUNTING HEIGHT	
6" from ceiling 24" from vertical surface 72" from face of heater to combustible surface	RPH-208	8'-12'
	RPH-240	8'-12'

MFG CATALOG NUMBER	MFG MODEL NUMBER	WATTS	BTUs	VOLTS	PHASE	AMPS	REPLACEMENT QUARTZ LAMP	WT. (LBS)	OPTIONAL WIREGUARD	
									MFG CATALOG NUMBER	MFG MODEL NUMBER
08845039	RPH-208-A	1600	5,461	208	1	7.7	632-1620	5	04466302	RPHWG
08845139	RPH-240-A	1600	5,461	240	1	6.7	632-1624	5		

MM Series "Mitey Midget" Electric Infrared Heater

⚠WARNING: This product can expose you to chemicals including nickel which is known to the State of California to cause cancer, and chromium, which is known to the State of California to cause birth defects and/or reproductive harm. For more information go to www.P65Warnings.ca.gov.

- Instant, high-intensity radiant heat, with 60° symmetric heat pattern
- MM heaters excel as people-heaters in areas requiring a linear, compact & concentrated heat source
- Listed for indoor industrial and commercial comfort heat applications
- Heavy duty Aluminum extrusion with a bright Aluminum insert for maximum reflectivity
- Anodized Aluminum housing, (0.62" thick)
- Heat Element Sold Separately
- Dimensions: 3.750" Wide x 3.380" High
- Made in U.S.A.

Intertek

Mounting Clearances
24" from ceiling & from vertical surface 24" from face of heater to combustible surface 36" from another heater

MFG CATALOG NUMBER	MFG MODEL NUMBER	MAX WATTS	MAX BTUs	MAX VOLTS	PH	UNIT LENGTH	WT. (LBS)	OPTIONAL WIREGUARDS	
								MFG CATALOG NUMBER	MFG MODEL NUMBER
04440102	MM-13A	500	1707	120	1	13"	3	04439002	MMWG-13
04427602	MM-18A	1000	3413	240	1	18"	4	04439102	MMWG-18
04495402	MM-24A	900 / 1600	5461	277	1	24"	5	04418902	MMWG-24
04427202	MM-33A	2500	8533	575	1	33"	6	04439202	MMWG-33
04420302	MM-46A	3000 / 3800	12457	575	1	46"	7	04420402	MMWG-46

Note: All MM-13A through MM-46A models are ETL Listed for use with Quartz Lamps Only!
Lamp voltage must match supply voltage.

FFH Series Electric Utility Infrared Heater

FFH-512A

FFH-912B

⚠WARNING: This product can expose you to chemicals including nickel which is known to the State of California to cause cancer, and chromium, which is known to the State of California to cause birth defects and/or reproductive harm. For more information go to www.P65Warnings.ca.gov.

- Both FFH Series Heaters are excellent for Farrowing & Finishing applications
- Both units feature an 8 ft. 18/3 grounded cordset to plug into any 120V service
- Gold anodized Aluminum reflectors, with a 90° symmetrical reflector pattern
- Compact housing design, with the following housing finish:
  - FFH-512A: Gold Anodized Finish
  - FFH-912B: Brown Enamel Finish
- Quartz Tubes Heat Element(s), Wire Guard & (2) 4' ft. Jack Chains are included
- FFH-912B Only: Offers (2) On/Off toggle switches to operate heating elements independently
- Listed for indoor industrial and commercial comfort heat
- Made in U.S.A.

Intertek

MOUNTING CLEARANCES
3" from ceiling 24" from vertical surface 72" from floor

SIZING CHART - FFH SERIES					
MOUNTING HEIGHT	HEATER MODEL	LENGTH	WIDTH	COVERAGE (Sq. Ft.)	WATTS / Sq. Ft.
6'	FFH-512A	7	6	42	13.1
	FFH-912B	6	7	42	21.4
7'	FFH-512A	8	7	56	9.8
	FFH-912B	7	8	56	16.1
8'	FFH-512A	9	8	72	7.6
	FFH-912B	8	9	72	12.5

MFG CATALOG NUMBER	MFG MODEL NUMBER	WATTS	BTUs	VOLTS	PHASE	AMPS	REPLACEMENT QUARTZ TUBE	WT. (LBS)	Dimensions (in.)		
									Length	Width	Height
08838900	FFH-512A	550	1877	120	1	5	671-3492	4	22	5	3
08827814	FFH-912B	450/900	3072	120	1	8	671-3454	4	17	6	4

Clear & Red Quartz Lamps - 12mm Diameter

- Near wavelength infrared, color temp. emitted approx. 4100° F (high brightness)
- Approximately 96% radiant efficiency
- Excellent resistance to thermal shock
- Highest moisture resistance and quickest heat-up time
- ⅜" Diameter clear or red quartz envelope
- Coiled tungsten filament; sealed porcelain end caps; halogen gas filled

Model prefix types:
630 = Horizontal Burning "Clear"
631 = Vertical OR Horizontal Burning "Clear"
632 = Horizontal Burning "Red"

Notes:
- Life expectancy of all heating elements = 5,000 hours
- All heating elements operate at 50 / 60 Hertz.

WARNING: This product can expose you to chemicals including nickel which is known to the State of California to cause cancer, and chromium, which is known to the State of California to cause birth defects and/or reproductive harm. For more information go to www.P65Warnings.ca.gov.

MFG CATALOG NUMBER	MFG MODEL NUMBER	WATTS	VOLTS	LENGTH (IN.)		ENVELOPE TYPE	FITS MODEL
				Overall	Heated		
04400502	630-05129	500	120	8 11/16	5	12mm DIAMETER CLEAR	MM-13A
04401602	630-16209	1600	208	19 11/16	16		222, 223, or MM-24A
04401702	630-16249		240				
04409902	631-16249		240				
04401802	630-16279		277				
04817302	630-16489		480				
04817402	630-25209	2500	208	28 11/16	25		342, 343, or MM-33A
04817502	630-25249		240				
04817602	630-25279		277				
04405402	630-25489		480				
04403602	631-25489		480				
04406802	631-25609		600				
04406702	630-36489	3650	480	41 11/16	38		462, 463, or MM-46A
04462302	630-38579	3800	577				
04441302	631-38579		577				
04461502	632-1620	1600	208	19 11/16	16	12mm DIAMETER RED	222/223 or RPH
04461602	632-1624		240				
04462202	632-2548	2500	480	28 11/16	25		342 or 343

Quartz Tubes

- Medium wavelength infrared, color temp emitting approx. 1800°F (bright orange glow)
- Approximately 60% radiant efficiency
- Nickel-Chromium alloy coiled element with porcelain end caps and pigtailed termination
- ⅝" Diameter frosted quartz envelope
- Moderate heat-up/cool-down

Notes:
- Life expectancy of all heating elements = 5,000 hours
- All heating elements operate at 50 / 60 Hertz.

WARNING: This product can expose you to chemicals including nickel which is known to the State of California to cause cancer, and chromium, which is known to the State of California to cause birth defects and/or reproductive harm. For more information go to www.P65Warnings.ca.gov.

MFG CATALOG NUMBER	MFG MODEL NUMBER	WATTS	VOLTS	LENGTH (IN.)		FITS MODEL
				Overall	Heated	
04432302	671-3784	1500	120	39 11/16	34 3/16	OCH-46
04418102	671-5061	2000	208			
04418002	671-3785	2000	240			
04419302	671-5018	2000	277			
04416602	671-5060	3000	208	50 11/16	45 3/16	OCH-57
04414702	671-3786	3000	240			
04419402	671-5059	3000	277			
04419502	671-5058	2250	480			
04914702	671-5062	2000	208	48 3/8	43	OCH2-55
04914802	671-5063		240			
04914902	671-5064		277			
04915002	671-5065	3000	208	59 1/4	53 3/8	OCH2-66
04915102	671-5066		240			
04915202	671-5067		277			
04403502	671-3454	450	120	12 15/16	8 7/16	FFH-912B
04400802	671-3492*	550	120	19 1/2	16	FFH-512A
04462402	671-5056	1000	120	18 5/16	14 7/16	CH-2212-1C
04462502	671-5057	1425	240	27 5/16	23 7/16	CH-6424-1C

*⅜" Diameter

Flat Panel Emitter Medium Wave Replacement Complete Conversion Kits - MR, CH, & FHK

- Medium wavelength infrared
- Color temp emitting approx. 1650°F
- Dull orange glow
- 78.5% radiant efficiency
- Black quartz composite face
- Non-glare & no glass materials
- Wound resistance wire consists of iron, chromium, & aluminum alloy
- Refractory blanket insulation
- High temp ceramic fiberboard
- Aluminized steel enclosure frame
- Electrical junction box
- Slow heat-up/cool-down
- 25,000 life expectancy
- Operates on 50 / 60 Hertz

Notes:
- Life expectancy of all heating elements = 25,000 hours
- All heating elements operate at 50 / 60 Hertz.

WARNING: This product can expose you to chemicals including nickel which is known to the State of California to cause cancer, and chromium, which is known to the State of California to cause birth defects and/or reproductive harm. For more information go to www.P65Warnings.ca.gov.

CH & MR SERIES - FLAT PANEL EMITTER CONVERSION KITS				
MFG CATALOG NUMBER	MFG MODEL NUMBER	WATTS	VOLTS	FOR USE WITH OLD MODEL #:
01358102	64337-022	3150	208	MR-420-1, CH-420-1C, CH-420-3A
01358202	64337-023		240	MR-424-1, CH-424-1C, CH-424-1A
01358302	64337-024		277	MR-427-1, CH-427-1C, CH-427-1A
01358402	64337-025		480	MR-448-1, CH-448-1C, CH-448-1A
01358502	64337-026		600	MR-457-1, CH-457-1C, CH-457-1A
01358602	64337-027	4300	208	MR-620-3, CH-620-3C, CH-620-3A
01358702	64337-028		240	MR-624-3, CH-624-3C, CH-624-3A
01358802	64337-029		277	MR-627-3, CH-627-3C, CH-627-3A
01358902	64337-030		480	MR-648-3, CH-648-3C, CH-648-3A
01359002	64337-031		600	MR-657-3, CH-657-3C, CH-657-3A
01359102	64337-032	9500	208	MR-1320-3, CH-1320-3B, CH-1320-3A
01359202	64337-033		240	MR-1324-3, CH-1324-3B, CH-1324-3A
01359302	64337-034		277	MR-1327-3, CH-1327-3B, CH-1327-3A
01359402	64337-035		480	MR-1348-3, CH-1348-3B, CH-1348-3A
01359502	64337-036		600	MR-1357-3, CH-1357-3B, CH-1357-3A
01359602	64337-037	9500	208	MR-2720-3, CH-2720-3C, CH-2720-3B
01359702	64337-038		240	MR-2724-3, CH-2724-3C, CH-2724-3B
01359802	64337-039		277	MR-2727-3, CH-2724-3C, CH-2724-3B
01359902	64337-040		480	MR-2748-3, CH-2748-3C, CH-2748-3B
01360002	64337-041		600	MR-2757-3, CH-2757-3C, CH-2757-3B
FHK Series - Flat Panel Emitter Conversion Kits				
01360802	64337-049	4300	208	FHK-620-3A
01360902	64337-050		240	FHK-624-3A
01361002	64337-051		480	FHK-648-3A
01361102	64337-052	9500	208	FHK-1320-3A
01361202	64337-053		240	FHK-1324-3A
01361302	64337-054		480	FHK-1348-3A
Note: There are no element replacement kits for CH-2, MR-2, FHK-2, or FHK-4 model series heaters.				

Variable Controllers

VHC-32

- Solid State phase angle variable "Triac" knob controller adjusts heat settings from 10-100% with heat loads up to 15.4-Amps
- 208/240 VAC single-phase, single stage controller, 3200 Watt max
- Positive "Off" & built-in On/Off Rocker switch lights "red" during operation
- NEMA 1 Aluminum enclosure with stainless steel face plate designed for wall mounting or suitable for semi-recessed applications
- Must be mounted in a protected area.
- Can either operate Quartz Lamps or Quartz Tube Infrared Heaters

⚠ WARNING: This product can expose you to chemicals including nickel which is known to the State of California to cause cancer, and chromium, which is known to the State of California to cause birth defects and/or reproductive harm. For more information go to www.P65Warnings.ca.gov.

VHC-15

- Solid state variable device controls heat loads up to 15-Amps
- 120/208/240Volt "In-Line" Controller
- Built in On/Off knob switch with positive "off" & surface plate included
- Designed for a 2" x 4" electrical wall box mounting (not supplied)
- Must be mounted in a protected area.
- Can only operate Fostoria Quartz Tube Infrared Heaters

30-Amp or 80-Amp Enclosed

18D-2-80CF ENC.

- SCR Voltage Controller - 80 Amp MAX.
- Includes (1) 24-volt Potentiometer (3" square) to control the heat output
- Only operates Quartz Lamps at 240 or 208-Volts, single phase only
- Potentiometer can be mounted outside, but the SCR must be located in a protected area
- Factory wired with millisecond fuses included

MFG CATALOG NUMBER	MFG MODEL NUMBER	DESCRIPTION	DIMENSION (IN.)			WT. (LBS)
			Depth	Width	Height	
04853502	VHC-32	Variable Heat Controller 208/240-Volt; 15.4 Amp	3	5	5	3
04459402	VHC-15	Variable Heat Controller 120/208/240-Volt; 15 Amp	3	5	5	3
04459502	FTC-30	208/240-Volt; 28 Amp	2	5	5	3
04456302	18D-2-30CF (Open)	SCR Controller - 26 Amp MAX; No Enclosure	6	6	9	11
04456402	18D-2-30CF (Enclosed)	SCR Controller - 26 Amp MAX; Enclosure Included	8	10	12	15
04456502	18D-2-80CF (Enclosed)	SCR Controller - 80 Amp MAX; Enclosure Included	8	12	14	29

Snow & Ice Detectors

CIT-1

APS-3C

⚠ WARNING: This product can expose you to chemicals including nickel which is known to the State of California to cause cancer, and chromium, which is known to the State of California to cause birth defects and/or reproductive harm. For more information go to www.P65Warnings.ca.gov.

- Main control unit for Automatic Snow & Ice Control Systems
- By sensing both temperature and moisture the system activates and melts any snow & ice accumulations until conditions subside
- NEMA 3R Enclosure is UL Listed and houses timers and switching electronics to operate the system
- Capability to monitor up to 6 sensors (CIT-1)
- Unit can be manually activated and can be controlled and monitored from an optional remote switch (Model RCU- contact factory)
- Positioned above ground to maximize the sensors capability
- Detects falling or blowing of precipitation such as snow when the temperature is below 38°F
- Most common sensor device

MFG CATALOG NUMBER	MFG MODEL NUMBER	DESCRIPTION	DIMENSION (IN.)			WT. (LBS)
			Depth	Width	Height	
03196100	APS-3C	Snow / Ice Control Switch	6.56	11.5	9.25	8
03197600	CIT-1	General Purpose Snow Sensor	3.25	3.25	4.13	1

Note: Any snow & ice control system should be used with the correct sized control panel (with contactors & fusing) as supplied by factory or your electrical contractor. The APS-3C requires a control device (CIT-1) in order to operate properly and must use 120V. Additional controls available through manufacturer.

Contactor Enclosures

FEC-30-120

⚠ WARNING: This product can expose you to chemicals including nickel which is known to the State of California to cause cancer, and chromium, which is known to the State of California to cause birth defects and/or reproductive harm. For more information go to www.P65Warnings.ca.gov.

- Economical load handling / switch device, ideal for use with other control equipment
- NEMA 1 Enclosures
- Load rating up to 600V Max., 3-Pole
- Magnetic contactor

MFG CATALOG NUMBER	MFG MODEL NUMBER	CONTACTOR AMPS	COIL VOLTAGE	CABINET SIZE (IN.)			WT. (LBS)
				Depth	Width	Height	
04408502	FEC-30-120	30	120	5	6	10	5
04408602	FEC-30-240		208/240				
04408702	FEC-60-120	60	120				
04408802	FEC-60-240		208/240				

Note: Installer to provide overload protection for all infrared heaters

Pre-Wired Contactor Panels

FPC2120

⚠ **WARNING:** This product can expose you to chemicals including nickel which is known to the State of California to cause cancer, and chromium, which is known to the State of California to cause birth defects and/or reproductive harm. For more information go to www.P65Warnings.ca.gov.

- **ONE HEATER PER CIRCUIT**
- Max 48-Amps per circuit*
- Step-down transformer for 24V or 120V control circuit
- Secondary control circuit fusing
- 3-Phase load rated
- NEMA 1 Enclosures

The following controls are available:

- Snow and Ice Detector (APS-3C) (120 volt control required)
- Single and Two-Stage Thermostats (Two-Stage Thermostats require a minimum of 2 circuits)

IMPORTANT FUSING INFORMATION

Fuses are NOT included since panels can be used with various infrared heat sources.
Quartz Lamp Heat Sources: Use FRS-600V (or equal) "Time Delay" fuses; Class RK-5.
Quartz Tube & Flat Panel Emitter Heat Sources: Use KTS-R 600V (or equal) "Fast Acting" fuses; Class RK-1.

*Circuit fusing less than 35 Amps will require the use of fuse reducers - **Not included**

Standard Models

120-V CONTROL SYSTEM		24-V CONTROL SYSTEM		CIRCUITS	VOLTS	CABINET SIZE (IN.)			WT. (LBS)
MFG CATALOG NUMBER	MFG MODEL NUMBER	MFG CATALOG NUMBER	MFG MODEL NUMBER			DEPTH	WIDTH	HEIGHT	
04459902	FPC8110	04864302	FPC8210	1	208	6.75	16	24	52
04460002	FPC2110	04864402	FPC2210		240				
04460102	FPC7110	04864502	FPC7210		277/480				
04460202	FPC4110	04864602	FPC4210		480				
04460302	FPC8120	04864702	FPC8220	2	208	6.75	16	24	70
04460402	FPC2120	04864802	FPC2220		240				
04460502	FPC7120	04864902	FPC7220		277/480				
04460602	FPC4120	04865002	FPC4220		480				
04460702	FPC8140	04865102	FPC8240	4	208	6.75	24	30	88
04460802	FPC2140	04865202	FPC2240		240				
04460902	FPC7140	04865302	FPC7240		277/480				
04461002	FPC4140	04865402	FPC4240		480				
04461102	FPC8160	04865502	FPC8260	6	208	6.75	30	36	106
04461202	FPC2160	04865602	FPC2260		240				
04461302	FPC7160	04865702	FPC7260		277/480				
04461402	FPC4160	04865802	FPC4260		480				

Note: Products listed in this section are custom built and subject to 100% cancellation/restock charges

GENERAL: ICP panels are built with NEMA rated enclosure and sub panels for mounting electrical controls for use in staging and control of electric heating products. Panels are designed to comply with local and national codes for in the field connections of TPI Corporation heating products.

CONTROLS: Controls for electric heating products shall include, but not be limited to, the following standard controls for TPI Corporation electric heating products:

- Door interlock disconnect switch for single point field power connection
- Circuit breakers sized for AMP load of individual heater rating
- Definite purpose disconnecting contactor for each heater circuit
- Line terminal block for field connection to heater
- Ground lugs as required by NEC
- Control transformer for control circuit

OPTIONAL CONTROLS:

- Snow and ice melting controllers:
  - TPI controller - 120V field connection to controller
  - Field supplied controllers must specify required voltage
- SCR proportional controllers:
  - Potentionmeter for manual control of infrared heaters
  - 4-20 MA signal field supplied for control of infrared heaters

OPTIONAL ACCESSORIES:

- Power on indicator pilot lights
- Staging energized pilot lights
- Pilot switches for manual control per heaters
- Timer for internal control of heater cycle

⚠ **WARNING:** This product can expose you to chemicals including nickel which is known to the State of California to cause cancer, and chromium, which is known to the State of California to cause birth defects and/or reproductive harm. For more information go to www.P65Warnings.ca.gov.

HOW TO DESIGNATE A MODEL:

ICP-	1 or 3-	1-9-	24 or 120-	120-600-	ACCESSORIES-	KW-
Industrial Control Panel	Phase 1 = 1-Phase 3 = 3-Phase	Circuits 1, 2, 3, 4, 5, 6, 7, 8, 9	Control Voltage 24 = 24VAC 120 = 120VAC	Heater Voltage 120, 208, 240, 277, 480, 600	Consult Factory	KW Total KW of the heaters controlled.

TPI Corporation manufactures the ICP panel for control of electric infrared heating products. The models listed below are standard infrared products and all volts, phase, and amps can be seen in the charts provided on the pages that correspond to the series.

INFRARED HEATER SERIES	HEATER DESCRIPTION
FSS / FSA	EMITTER TYPE BLACK BODY HEATER WITH GOLD ANODIZED REFLECTOR
TH / THA	QUARTZ LAMP PAINTED STEEL FIXTURE WITH GOLD ANODIZED REFLECTOR
THSS	QUARTZ LAMP STAINLESS STEEL FIXTURE WITH GOLD ANODIZED REFLECTOR
OCH / OCH2	OUTDOOR/INDOOR SINGLE LAMP QUARTZ TUBE ELEMENTS
RPH	OUTDOOR RATED STAINLESS STEEL SINGLE ELEMENT

ICP panels are custom made and designed to be used with any TPI infrared heating product. Each panel requires an individually wired circuit for field connection to the panel from the heater. ICP panels are designed and constructed with all controls, factory wired, and ETL listed.

⚠ **WARNING:** This product can expose you to chemicals including nickel which is known to the State of California to cause cancer, and chromium, which is known to the State of California to cause birth defects and/or reproductive harm. For more information go to www.P65Warnings.ca.gov.

Standard Controls

- NEMA 4 outdoor rated industrial gray powder coated
- Door interlock disconnect switch
- Circuit breaker sized for heater load per stage
- Disconnecting magnetic contactor per stage
- Terminal block for field connection to heater per stage
- 24 Volt transformer (120 Volt transformer optional for snow/ice detectors)
- Control terminal block for connection to staging control

NUMBER OF STAGES	PANEL SIZE
1	24” x 24” x 8”
2	
3	
4	30” x 30” x 8”
5	
6	36” x 36” x 8”
7	
8	48” x 36” x 8”
9	

Note: Panel size subject to change depending on options selected

Snow/Ice Dectection Information

- Snow and ice units activate the system and melts any snow and ice accumulations until conditions subside based on detection of temperature and moisture.
- 120 Volt control required for use with TPI supplied snow and ice melting options. This can be indicated by selecting 120 for control voltage option in the model number designator.
- Snow/Ice control switch: APS-3C (capability of monitoring 6 snow sensors) NEMA 3R Enclosure is UL Listed and houses timers and switching electronics to operate the system.

Additional Panel Information

- All heater stages are wired to control terminal block individually and can be controlled individually or grouped together for multiple heaters to be energized by one thermostat or field supplied controller as required.
- Infrared heating products can be economically controlled using SCR proportional controls. Proportional controls can be operated by potentionmeter built into the control panel with a manual dial or field wired to building management system using 4-20 MA input to the control panel by control system.
- Timers to allow heater to operate for designed time can be mounted in the control panel to turn heater off in areas where occupancy is intermittent, such as smoking areas or public platforms.
- Panel sizes can vary with additional optional controls - consult factory.

Panel Lock-out

FSP Series Heavy Duty Flat Panel Emitter Electric Portable Infrared Heater

Stand Models | Hand Cart Models

⚠ **WARNING:** This product can expose you to chemicals including nickel which is known to the State of California to cause cancer, and chromium, which is known to the State of California to cause birth defects and/or reproductive harm. For more information go to www.P65Warnings.ca.gov.

- High density medium wave radiant heat with 60° symmetrical heat pattern.
- 25,000 hour element life expectancy
- Approximately, 78.5% efficient versus 50% for metal sheath type elements.
- Rugged flat panel emitter can be used in high vibration areas
- Single or three phase available on select models
- Heavy duty wire guard mounted on long lasting gold anodized reflector
- Made in U.S.A.

Square Feet Heated

KW	NON-PROTECTED AREA		SEMI-PROTECTED AREA		Required Clearance (from front of heater)
	BELOW 35 °F	ABOVE 35 °F	BELOW 35 °F	ABOVE 35 °F	
1.45	25	36	40	50	3 feet
3.15	64	75	90	125	3 feet
4.3	85	100	120	150	4 feet
9.5	192	225	270	375	7 feet

Standard FSP Models

MFG CATALOG NUMBER	MFG MODEL NUMBER	WATTS	VOLTS	PHASE	BTUs / Hr.	AMPS		WT. (LBS)	FSP Replacement Elements		OPTIONAL 25' POWER CORD	
						1 PH	3 PH		MFG CATALOG NUMBER	MFG MODEL NUMBER	MFG CATALOG NUMBER	MFG MODEL NUMBER
04883802	FSP-3120-1	3150	208	1	10,749	15.4	N/A	23	01356602	64337-007	08804600	SO 14/3
04883902	FSP-3124-1	3150	240	1		13.13	N/A		01360202	64337-043	08804600	SO 14/3
04884002	FSP-3127-1	3150	277	1		11.37	N/A		01356802	64337-009	08804600	SO 14/3
04884102	FSP-3148-1	3150	480	1		6.56	N/A		01360302	64337-044	08804600	SO 14/3
04884202	FSP-3157-1	3150	600	1		6.48	N/A		01357002	64337-011	08804600	SO 14/3
04884302	FSP-4320-3	4300	208	1 or 3	14,972	20.67	11.94	32	01361402	64337-055	03164201	SO 12/4
04884402	FSP-4324-3	4300	240	1 or 3		17.91	10.36		01360402	64337-045	08804900	SO 14/4
04884502	FSP-4327-1	4300	277	1		15.52	N/A		01361502	64337-056	08804600	SO 14/3
04884602	FSP-4348-3	4300	480	1 or 3		8.96	5.18		01360502	64337-046	08804900	SO 14/4
04884702	FSP-4357-3	4300	600	1 or 3		7.48	4.32		01357502	64337-016	08804900	SO 14/4
04884802	FSP-9520-3	9500	208	1 or 3	32,414	45.67	26.39	46	01361602	64337-057	08805100	S0 8/4*
04884902	FSP-9524-3	9500	240	1 or 3		39.68	22.89		01360602	64337-047	08805100	S0 8/4*
04885002	FSP-9527-1	9500	277	1		34.3	N/A		01361702	64337-058	08805200	SO 8/3
04885102	FSP-9548-3	9500	480	1 or 3		19.79	11.44		01360702	64337-048	03164201	SO 12/4
04885202	FSP-9557-3	9500	600	1 or 3		16.52	9.54		01362702	64337-063	08804900	SO 14/4

*3 Phase only

Factory Pre-Wired FSP-14 Model With 15 Ft. Cord with Grounded Plug On/Off Switch

MFG CATALOG NUMBER	MFG MODEL NUMBER	TYPE	WATTS	VOLTS	PHASE	BTUs / Hr.	AMPS	WT. (LBS)
04883702	FSP-1412-1C	STAND	1450	120	1	4947	12.1	17

Infrared Control Options

MFG CATALOG NUMBER	MFG MODEL NUMBER	DESCRIPTION	Operating Voltage (VAC)	Dimensions (In)			WT. (LBS)
				Ht.	Wd.	Dp.	
04858102	TO-SK-1	Tip-Over Switch	208V - 600V	10.3	10.3	5.0	12
05893702	DC-SK-1	Disconnect Switch	120V - 600V	5.0	6.0	4.0	5
04860202	GF-SK-1	Ground Fault Sensing Switch	208V - 600V	10.3	10.3	5.0	12

Note: All SK-1 Models have NEMA-1 Enclosure, 50-Amp Max. & 1/3-Phase Rated.

Model "TO" & "GF" features include a positive "off" & a built-in on/off rocker switch that glows red during operation. Additionally, enclosure can mount directly to the terminal box on the back of the heater (FSP-43/95 only) or be mounted to a remote wall surface.

TO-SK-1
or GF-SK-1

PCH Series Portable Quartz Infrared Spot Heater

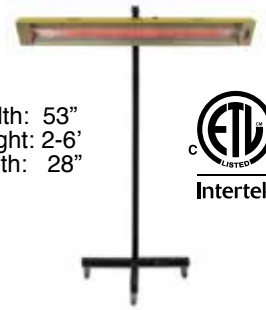

Width: 53”
Height: 2-6’
Depth: 28”

Intertek

⚠ **WARNING:** This product can expose you to chemicals including nickel which is known to the State of California to cause cancer, and chromium, which is known to the State of California to cause birth defects and/or reproductive harm. For more information go to www.P65Warnings.ca.gov.

Features

- Suitable for portable spot heat or for curing clear coat paint
- Height adjustable from 2’ to 6’
- On-Off rocker switch standard
- 4 casters included; Tip-Over power cutoff safety switch
- 60° symmetrical heat pattern
- ⅝” diameter quartz tube included
- Average element life is 5000 hours
- Bright Aluminum reflector and end caps
- 20 gauge powder coated Steel housing
- 15’ long, 3 wire (14/3) cordset with standard 3 pring NEMA 5-20P
- Made in U.S.A.

MFG CATALOG NUMBER	MFG MODEL NUMBER	WATTS	BTUs	VOLTS	PHASE	WT. (LBS)
08841110	PCH-48C	1500	5120	120	1	30
04914502	REPLACEMENT ELEMENT ASSEMBLY					

Portable Infrared Instant On-Off Heat Gun

⚠ **WARNING:** This product can expose you to chemicals including nickel which is known to the State of California to cause cancer, and chromium, which is known to the State of California to cause birth defects and/or reproductive harm. For more information go to www.P65Warnings.ca.gov.

Features

- Provides instant spot heat in a controlled pattern
- Spot cure retouched paint and other finishes
- De-wrinkle or relax materials such as cloth-vinyl-leather
- T-3 Tungsten IR lamp
- Ergonomically friendly, easy-grip handle
- 20’ long, 18/3 grd. cordset with GFCI plug
- Made in U.S.A.

MFG CATALOG NUMBER	MFG MODEL NUMBER	WATTS	VOLTS	AMPS	WT. (LBS)
05922802	RHG-1012A	1000	120	8.4	3

Portable Electric Infrared Heat Panels

Features

- Portable panels are built to withstand rigors of industrial and heavy-commercial applications, such as auto collision repair shops
- 20 gauge steel frame, base, and housing construction
- 3” steel casters for high stability and ease of mobility
- Gold anodized Aluminum reflectors and end caps allow 10% faster cure time than polished Aluminum reflectors, especially in paint and dust-laden atmospheres
- Elements achieve full temperature in less than 2 minutes
- Fused disconnect switches are installed on the back of each unit
- Units are positioned with adjustable hinges allowing the user to use direct heat more precisely to the target area
- Gentle but effective medium-wave radiant heat can quickly boost, flash-off, or cure a variety of finishes, and lessens the chance of blistering and/or overheating the coating
- Medium-wave infrared heating elements are also effective for flash-off of water-based clear coatings being mandated by environmental agencies in many states
- Made in U.S.A.

HP-5-QT

HP-11-QT

⚠ **WARNING:** This product can expose you to chemicals including nickel which is known to the State of California to cause cancer, and chromium, which is known to the State of California to cause birth defects and/or reproductive harm. For more information go to www.P65Warnings.ca.gov.

General Curing Guidelines

Material Type	Solvent Based Primer	Water Based Primer	Two Component Primer	Water Based Clear Coat	Acrylic enamel & Polyurethane Clear Coat	Urethane Clear Coat & High Solids Top Coat
Curing Time	3-5 mins	3-6 mins	8-20 mins	3-10 mins	12-30 mins	10-30 mins

Note: Curing times will vary depending on material and shop conditions. This chart is based on distances of 18-24” away from the target area.

Standard Models

MFG CATALOG NUMBER	MFG MODEL NUMBER	WATTS	VOLTS	AMPS	HEAT SOURCES	CABLE TYPE (20’)	DIMENSION (IN.)		HEATED AREA (IN.)		WT. (LBS)
							Width	Height	Width	Height	
08841202	HP-5-QT	4,800	240	20	4	12-3 SO	44 ⅝	56 ½	40	44	116
08841302	HP-6-QT	6,400		26.7	4		66 ⅝		61		141
08841402	HP-11-QT	11,200		46.7	7	6-3 SO		89 ½		77	225

THE ELECTRIC ALTERNATIVE TO PROPANE AND KEROSENE SPACE HEATERS

FES Series Product Features & Information

- Heater housing has a safety yellow textured powder coated finish and includes protective black finish guards on both air intake and output openings
- Long-life finned tubular heating elements, high-limit thermal cutout switch with automatic reset
- Control knob allows for fan only operation and thermostat adjustment from 40° to 100° F
- Fan-forced electric heaters generate 800 to as much as 2500-CFM's
- 9-30kW units features a built-in rotating stop allowing housing adjustments for up to 90° from center axis
- Includes access panel for direct wiring connections
- 10" industrial heavy duty wheels and handle for easy portability over all surface types
- 45-60kW units include two front locking casters and lifting handles for easy portability
- 9kW & 10kW units include a factory 10' long pre-wired cable and straight blade range plug; optional cord for all other models
- ETL Listed for USA & Canada
- Made in the USA

PROUDLY DESIGNED, ENGINEERED, TESTED, ASSEMBLED IN THE USA

Intertek

Application Solutions

- Provides temporary climate control for interior jobsite heating
- Drywall & building contractors – assist in drying applications
- Best indoor electric heating product over propane or fossil fuel units
- Safe operating unit – operate unit overnight to elevate temperature
- Can be operated unattended without anytime wasted for refueling
- Clean, quiet & safe electric fan-forced heater

Sizing FES Models

Sizing Chart Portable Electric Salamander Heaters					
KW SIZE	TEMP RISE	VOLTAGE	PHASE	MAX. SQ. FT.*	MAX. CEILING HEIGHT
9 kW	25°F	240V	1	600 up to 900	12'
10 kW	30°F	240V	1	750 up to 1000	15'
15 kW	45°F	208, 240, 480V	1 or 3	1000 up to 1500	15'
30 kW	45°F	480, 575V	1	1500 up to 2000	18'
45 kW	70°F	480, 575V	3	2000 up to 2400	24'
60 kW	74°F	480, 575V	3	2400 up to 3600	24'

*Based on using one single unit

15kW

30kW

45/60kW

9/10kW

FES 9/10kW:
50-Amp plug
NEMA 14-50P
(4-Wire)

Note: FES09 uses 3-wire 40amp plug

What to know when selecting the correct FES Heater:

1) Determine your operating voltage and electrical phase for your jobsite.
2) Calculate the square footage of the area to heat (Length x Width)
3) Measure the maximum ceiling height for your area.
4) Know you must have insulation and at least 10-watts/sq.ft. to effectively heat your area. The higher your ceiling the higher watts/sq.ft. needed.
5) Temperature rise is calculated by taking the room temperature then adding the temp rise (see chart); room temp + temp rise = discharge temp

Standard FES Models

MFG CATALOG NUMBER	MFG MODEL NUMBER	KW	BTUs	VOLTS	PH	AMPS	TEMP RISE	CFM	SO TYPE*	WT. (LBS)
08744302	FES-0924-1C	9	30717	240	1	38	25ºF	800	**	55
08860010	FES-1024-1CA	10	34130	240	1	42	30ºF		**	60
08860110	FES-1520-3A	15	51195	208	3	42	45ºF		6/4	65
08860710	FES-1524-1A	15	51195	240	1	63	45ºF		4/3	69
08860210	FES-1524-3E	15	51195	240	3	36	45ºF		6/4	65
08860310	FES-1548-3E	15	51195	480	3	18	45ºF		12/4	65
08860410	FES-1560-3A	15	51195	600	3	15	45ºF		12/4	65
08860510	FES-3048-3A	30	102390	480	3	36	90ºF	1100	6/4	83
08860610	FES-3060-3A	30	102390	600	3	29	90ºF		6/4	65
08722202	FES-4548-3	45	153585	480	3	55.4	70°F	2200	4/4	198
04874002	FES-4557-3	45	153585	575	3	46.2	70°F		4/4	198
04915302	FES-6048-3	60	204780	480	3	73.5	74°F	2500	2/4	225
04915402	FES-6057-3	60	204780	575	3	61.3	74°F		4/4	225

**9 & 10 KW, 240V, 1Phase factory pre-wired model with 10 ft. cable & straight blade range plug

OPTIONAL 25' POWER CORD*			
MFG CATALOG NUMBER	MFG MODEL NUMBER	FOR USE WITH FES MODEL	AMP RATING
03164001	SO 6/4	FES-1520-3A FES-1524-3E FES-3048-3A FES-3060-3A	45
08805300	SO 4/3	FES-1524-1A	70
03164201	SO 12/4	FES-1548-3E FES-1560-3A	20
03164301	SO 4/4	FES-4548-3 FES-4557-3 FES-6057-3	60
04917302	SO 2/4	FES-6048-3	80

Optional SO TYPE Power Cords

- All power cords are 25' long with SO oil resistant cable jacket
- Includes either 3 or 4-conductors
- Cable connectors included
- Plug NOT included
- Made in U.S.A.

⚠ **WARNING:** This product can expose you to chemicals including nickel which is known to the State of California to cause cancer, and chromium, which is known to the State of California to cause birth defects and/or reproductive harm. For more information go to www.P65Warnings.ca.gov.

YES Series Wall or Ceiling Models

- Same housing design & features used on all FES Series Heaters
- Includes steel mounting bracket with textured black powder coated finish allows for either wall or ceiling mount configurations
- Unit is ready for direct wiring
- Thermostat adjustment 40° to 100° F
- Made in U.S.A.

Ceiling Mounted

Wall Mounted

MFG CATALOG NUMBER	MFG MODEL NUMBER	KW	BTUs	VOLTS	PHASE	AMPS	TEMP RISE	WT. (LBS)
08860810	YES-1520-3A	15	51195	208	3	42	45ºF	60
08861810	YES-1524-1A	15	51195	240	1	63	45ºF	
08860910	YES-1524-3E	15	51195	240	3	36	45ºF	
08861010	YES-1548-3E	15	51195	480	3	18	45ºF	
08861210	YES-3048-3A	30	102390	480	3	36	90ºF	72
08861310	YES-3060-3A	30	102390	600	3	29		

Intertek

⚠ **WARNING:** This product can expose you to chemicals including nickel which is known to the State of California to cause cancer, and chromium, which is known to the State of California to cause birth defects and/or reproductive harm. For more information go to www.P65Warnings.ca.gov.

150TS Series 120 Volt Portable Electric Heater

Product Features

- 750 / 1500 watts
- All steel construction
- Powder coat paint finish for durable, long lasting service
- Manual reset thermal safety limit
- Illuminated ON/OFF switch
- Two stage thermostat
- 6 foot power cord with molded NEMA 5-15 plug
- Width: 10” Height: 11½” Depth: 6”
- Made in U.S.A.

Back of heater

Intertek

⚠ **WARNING:** This product can expose you to chemicals including nickel which is known to the State of California to cause cancer, and chromium, which is known to the State of California to cause birth defects and/or reproductive harm. For more information go to www.P65Warnings.ca.gov.

Standard Models

MFG CATALOG NUMBER	MFG MODEL NUMBER	VOLTS	WATTS	AMPS	DECIBELS*	WT. (LBS)
01190802	150TS	120	750 / 1500	12.5	53dBA	9

*Rated at 5 feet

198 Series 120 Volt Radiant and/or Fan Forced Portable Heater

Product Features

- 3-Heat settings:
  - 600 Watt radiant
  - 900 Watt fan forced
  - 1500 Watt radiant & fan forced
- Temperature control thermostat
- Imported to TPI Corporation specifications
- Dual safety system:
  - Tip over switch
  - Manual reset type limit control
- 6’ long - 3 conductor cord
- 1 year limited warranty
- Width: 11”
  Height: 15”
  Depth: 12”

Intertek

Standard Models

MFG CATALOG NUMBER	MFG MODEL NUMBER	WATTS	MAX BTUs	VOLTS	AMPS	PHASE	WT. (LBS)
04450902	198 TMC	1500 / 900 / 600	5120	120	12.5 / 7.5 / 5	1	9

⚠ **WARNING:** This product can expose you to chemicals including nickel which is known to the State of California to cause cancer, and chromium, which is known to the State of California to cause birth defects and/or reproductive harm. For more information go to www.P65Warnings.ca.gov.

178 Series 120 Volt Ceramic Fan Forced Portable Heater

Product Features

- Two heat settings: 1500W / 950W plus fan only setting (20W)
- Temperature control thermostat
- 6’ long - 3 conductor cord
- Width: 11 ¼” Height: 10” Depth: 7”
- Double safety system:
  - Manual reset type limit control
  - Thermal cut-off device
- Imported to TPI Corporation specifications

⚠ **WARNING:** This product can expose you to chemicals including nickel which is known to the State of California to cause cancer, and chromium, which is known to the State of California to cause birth defects and/or reproductive harm. For more information go to www.P65Warnings.ca.gov.

Standard Models

MFG CATALOG NUMBER	MFG MODEL NUMBER	WATTS	MAX BTUs	VOLTS	AMPS	PHASE	WT. (LBS)
04459302	178 TMC	1500 / 950	5120	120	12.5 / 7.1	1	8

188 Series 120 Volt "Milk-house" Style Fan Forced Portable Heater

Product Features

- 1300W & 1500W heat settings plus fan only setting
- Temperature control thermostat
- 6' long - 3 conductor cord
- Imported to TPI Corporation specifications
- Triple safety system:
  - Tip over switch
  - Automatic reset type limit control
  - Thermal cut-off device
- Width: 10"
  Height: 16"
  Depth: 9 ½"

Standard Models

MFG CATALOG NUMBER	MFG MODEL NUMBER	WATTS	MAX BTUs	VOLTS	AMPS	PHASE	WT. (LBS)
08004102	188 TASA	1500 / 1300	5120	120	12.5 / 10.8	1	9

WARNING: This product can expose you to chemicals including nickel which is known to the State of California to cause cancer, and chromium, which is known to the State of California to cause birth defects and/or reproductive harm. For more information go to www.P65Warnings.ca.gov.

E3915 Series Portable Hydronic Baseboard

WARNING: This product can expose you to chemicals including nickel which is known to the State of California to cause cancer, and chromium, which is known to the State of California to cause birth defects and/or reproductive harm. For more information go to www.P65Warnings.ca.gov.

Product Features

- Manual reset limit control
- 2 stage thermostat (750 Watt / 1500 Watt)
- Positive On / Off switch
- Heavy duty cabinet construction
- Includes heavy duty carry handle
- Height: 9" Length: 60" Depth: 3"

Standard Models

MFG CATALOG NUMBER	MFG MODEL NUMBER	WATTS	MAX BTUs	VOLTS	AMPS	PHASE	WT. (LBS)
01186702	E3915-60P	1500/750	5120	120	12.5 / 6.25	1	35

483 Series 120 Volt Portable Baseboard Convection Heater

Product Features

- 1500 Watt convection heater
- Temperature control thermostat
- Manual reset type limit control
- Power on indicator light
- 6' long - 3 conductor cord
- Imported to TPI Corporation specifications
- Width: 48"
  Height: 5 ¼"
  Depth: 7 ½"

Standard Models

MFG CATALOG NUMBER	MFG MODEL NUMBER	WATTS	MAX BTUs	VOLTS	AMPS	PHASE	WT. (LBS)
08708802	483 TM	1500	5120	120	12.5	1	13

WARNING: This product can expose you to chemicals including nickel which is known to the State of California to cause cancer, and chromium, which is known to the State of California to cause birth defects and/or reproductive harm. For more information go to www.P65Warnings.ca.gov.

474 Series 240 Volt Dual Heat Fan Forced Portable Heater

Product Features

- 1920W & 3840W heat settings
- Temperature control thermostat (40°-110° F)
- Manual reset type limit control
- 6' long - 3 conductor cord
- Imported to TPI Corporation specifications

Width: 16"
Height: 16"
Depth: 8 ½"

WARNING: This product can expose you to chemicals including nickel which is known to the State of California to cause cancer, and chromium, which is known to the State of California to cause birth defects and/or reproductive harm. For more information go to www.P65Warnings.ca.gov.

20 AMP Plug
NEMA #6-20P

Standard Models

MFG CATALOG NUMBER	MFG MODEL NUMBER	WATTS	MAX BTUs	VOLTS	AMPS	PHASE	WT. (LBS)
04461802	H474TM-C	1920/3840	13106	240	8.0 / 16.0	1	20

5800 Series Garage/Workshop 240/208 Volt Fan Forced Portable Heater

Product Features

- Up to 4800 Watts of heating comfort for garage or utility room applications
- 4000 Watts available for smaller areas
- Built in bi-metal double pole thermostat 50° to 90° range
- Steel tubular heating element
- Wall/Ceiling bracket included
- Manual reset standard
- Power on and overheat pilot lights
- Imported to TPI Corporation specifications

ITEM	WIDTH	HEIGHT	DEPTH
Heater	10.625"	11"	9.625"
Bracket	2.5"	10"	14.0"

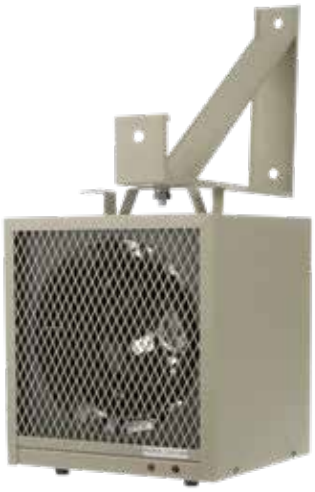

WARNING: This product can expose you to chemicals including nickel which is known to the State of California to cause cancer, and chromium, which is known to the State of California to cause birth defects and/or reproductive harm. For more information go to www.P65Warnings.ca.gov.

20 AMP Plug
NEMA #6-20P
HF5840TC

30 AMP Plug
NEMA #6-30P
HF5848TC

Standard Models

MFG CATALOG NUMBER	MFG MODEL NUMBER	WATTS	MAX BTUs	VOLTS	AMPS	PHASE	PLUG TYPE	WT. (LBS)
05034002	HF5840TC	4000/3000	13652	240 / 208	16.6 / 14.4	1	20 Amp	17
05033902	HF5848TC	4800/3600	15086		20 / 17.3		30 Amp	

ICH Series 240/208 Volt Construction Site/Utility Fan Forced Portable Heater

Product Features

- Operates on 240V or 208V
- Steel tubular heating element
- 43°F air heat rise
- Internal overheat thermostat
- Imported to TPI Corporation specifications
- Temperature control thermostat with 60°F-110°F range
- 6' long cordset
- Width: 10 ⅝" Height: 12 ¾" Depth: 10"

Standard Models

MFG CATALOG NUMBER	MFG MODEL NUMBER	WATTS	MAX BTUs	VOLTS	AMPS	PHASE	WT. (LBS)
04508702	ICH-240C	4000 / 3000	13648	240 / 208	16.7 / 14.4	1	15

20 AMP Plug
NEMA #6-20P

WARNING: This product can expose you to chemicals including nickel which is known to the State of California to cause cancer, and chromium, which is known to the State of California to cause birth defects and/or reproductive harm. For more information go to www.P65Warnings.ca.gov.

680 Series "Bulldog" 240/208 Volt Fan Forced Portable Unit Heater

Product Features

- Operates on 240V or 208V
- Finned steel tubular heating element
- Internal manual reset thermal cut-out
- 6' long cord with molded plug
- Temperature control thermostat with 60°F-110°F range
- 10' air throw - 262 CFM
- Imported to TPI Corporation specifications
- Width: 13 ½" Height: 17 ½" Depth: 11 ½"

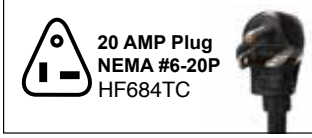

20 AMP Plug
NEMA #6-20P
HF684TC

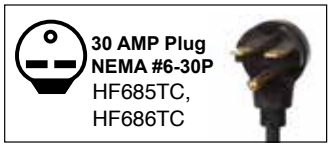

30 AMP Plug
NEMA #6-30P
HF685TC,
HF686TC

⚠ **WARNING:** This product can expose you to chemicals including nickel which is known to the State of California to cause cancer, and chromium, which is known to the State of California to cause birth defects and/or reproductive harm. For more information go to www.P65Warnings.ca.gov.

Swivel base allows unit to be wall, floor, or ceiling mounted

Standard Models

MFG CATALOG NUMBER	MFG MODEL NUMBER	WATTS	MAX BTUs	VOLTS	PHASE	AMPS	TEMP RISE	WT. (LBS)
04462802	*HF684TC	4000/3000	13652/10239	240/208	1	16.7/14.4	48°F	20
04462902	HF685TC	4800/3600	16384/12288	240/208	1	20.0/17.3	58°F	20
04463002	HF686TC	5600/4200	19107/14330	240/208	1	23.3/20.2	75°F	20
06835002	A1560	OPTIONAL WALL CEILING BRACKET FOR HF680 & ICH 240C SERIES HEATERS						

*HF684TC UL listed only

Specialty Heaters

RPH Series Pump House Convection Specialty Heater

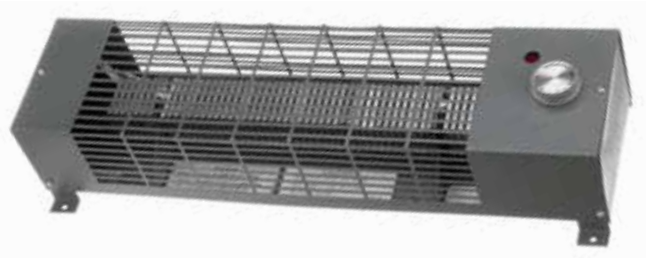

Intertek

⚠ **WARNING:** This product can expose you to chemicals including nickel which is known to the State of California to cause cancer, and chromium, which is known to the State of California to cause birth defects and/or reproductive harm. For more information go to www.P65Warnings.ca.gov.

Product Features

- Provides protection against freezing for pump houses, utility rooms, relay stations, construction sheds, etc.
- Stainless steel heating element and Aluminum fins
- Automatic temperature control thermostat with a 30°F to 140°F range
- Powder coated epoxy steel case
- Dimension 20" x 5 ½" x 4"
- Over heat protection thermal fuse
- Made in U.S.A.

Standard Models

MFG CATALOG NUMBER	MFG MODEL NUMBER	WATTS	BTUs	VOLTS	AMPS	WT. (LBS)
09990802	RPH1-5A	500	1706	120	4.2	5
09990902	RPH2-5A	500	1706	240	2.1	5
International Models						
09842602	RPH22-5Ai	500	1706	220	2.3	5

FH Series In-Floor Fan Forced Specialty Heater

Product Features

- Powder coated 20 gauge steel case
- 14 gauge grill
- Steel spiral finned heating element
- Auto reset thermal cut out with visual alarm
- Floor opening: 14 ⅛" x 7 ¼" x 7 ⅜"
- Grill dimensions: 15 13⁄16" x 8 13⁄16"
- Made in U.S.A.

Intertek

⚠ WARNING: This product can expose you to chemicals including nickel which is known to the State of California to cause cancer, and chromium, which is known to the State of California to cause birth defects and/or reproductive harm. For more information go to www.P65Warnings.ca.gov.

Standard Models

MFG CATALOG NUMBER	MFG MODEL NUMBER	WATTS	BTUs	VOLTS	AMPS	WT. (LBS)
03782302	FH15	750	2560	120	6.25	15
		1500	5120	120	12.5	
		1500/1125	5120 / 3840	240/208	6.25/5.41	
OPTIONAL FIELD INSTALLED THERMOSTATS						
03782702	FH1T	Single Pole Integral Thermostat Kit (40°-110°F)				1

TSH Series Fan Forced Kickspace Specialty Heater

Intertek

⚠ WARNING: This product can expose you to chemicals including nickel which is known to the State of California to cause cancer, and chromium, which is known to the State of California to cause birth defects and/or reproductive harm. For more information go to www.P65Warnings.ca.gov.

Product Features

- Fits into soffits, stair risers or under utility cabinets
- Finned steel heating element
- Manual reset thermal cut-out
- Recessed opening: 22 ⅜" x 3 ⅝" x 11 ½"
- Grill dimensions: 23 ⅞" x 3 5⁄16"
- Zero inch clearance for installation
- Made in U.S.A.

Standard Models

MFG CATALOG NUMBER	MFG MODEL NUMBER	WATTS	BTUs	VOLTS	AMPS	WT. (LBS)
03818002	TSH20J	1500 / 1000	5120 / 3412	120	12.5 / 8.4	16
		1500 / 750	5120 / 2560	208	7.2 / 3.6	
		2000 / 1000	6284 / 3412	240	8.4 / 4.2	
09701702	TSH20JW	Above Model with White Grill				
OPTIONAL FIELD INSTALLED THERMOSTATS						
03783702	TSH1TX	Single Pole Integral Thermostat Kit (40°-100°F)				1
03783802	TSH2TX	Double Pole Integral Thermostat Kit (40°-100°F)				1

CF-C Series TPI Commercial Air Curtains

Features

- Super thin body, full metal housing
- Cross flow, 2-speed fans
- Adjustable air deflector
- Mechanical control
- Units are 120V at 60Hz

⚠ WARNING: This product can expose you to chemicals including nickel which is known to the State of California to cause cancer, and chromium, which is known to the State of California to cause birth defects and/or reproductive harm. For more information go to www.P65Warnings.ca.gov.

Standard Models

MFG CATALOG NUMBER	MFG MODEL NUMBER	WATTS	CFM		FPM		NOISE LEVEL (dB)		DIMENSIONS			WT. (LBS)
			HIGH	LOW	HIGH	LOW	HIGH	LOW	"L"	"W"	"H"	
08764402	CF35-C	300	1177	942	2560	1968	67	65	35"	8 ¾"	10 ¼"	33.1
08764502	CF47-C	350	1648	1295	2560	1968	69	67	47"			43
08764602	CF59-C	400	2119	1648	2560	1968	71	69	59"			48.5

Product Specifications

CABINET & CONSTRUCTION: Shall be constructed of 20 gauge rigid steel with baked on epoxy powder coat paint for durability. Made in U.S.A.

DISCHARGE VANES: Shall extend the entire width of the unit and be adjustable for optimum performance of air flow.

BLOWERS: Shall be forward curved centrifugal type, DWDI with corrosion resistance scroll and wheel.

MOTORS: Shall be heavy duty, PSC, direct drive high efficiency and designed for use with SCR controllers. Motors shall be permanently lubricated for long life and have thermal over load protection. Motor shall have double insulation protection for quieter operation. Quick disconnects shall be supplied to accommodate easy installation and service of motor.

SCR SPEED CONTROLLER: Supplied on all units compatible with the motor with low end adjustment for air volume control and savings in power consumption.

ELECTRIC HEAT (OPTIONAL): Electric heater available as field installed option. Electric heater shall be steel sheath element with helical wound steel fins for maximum heat transfer and safety.

Intertek

⚠ **WARNING:** This product can expose you to chemicals including nickel which is known to the State of California to cause cancer, and chromium, which is known to the State of California to cause birth defects and/or reproductive harm. For more information go to www.P65Warnings.ca.gov.

MFG CATALOG NUMBER	SIZE (in)	MFG MODEL NUMBER	FT. / MIN. HI - LOW	NOZZLE CFM	VOLTS	RPM HI - LOW	AMPS HI - LOW	WATTS HI - LOW	WT. (LBS)
STANDARD UNITS: 1/2 HP MODELS - UP TO 10' HIGH DOORWAYS - WITHOUT HEAT SECTION									
06712002	36	CF36	3288/455	2672/333	120	1659/620	3.9/3.4	472/154	74
06712102	48	CF48	4168/786	4515/766		1606/583	4.4/3.6	519/189	82
06712202	60	CF60	4168/764	6544/931		1636/562	4.4/3.8	509/199	90
	72	2 EA: CF36	3288/455	5344/666		1659/620	7.8/6.8	944/308	148
	96	2 EA: CF48	4168/786	9030/1532		1606/583	8.8/7.2	1038/378	164
	108	3 EA: CF36	3288/455	8016/999		1659/620	11.7/10.2	1416/462	222
	120	1 EA: CF48	4168/786	9859/1432		1606/583	12.2/10.4	1982/497	230
		2 EA:CF36	2672/333			1659/620			
HEAVY DUTY UNITS: 3/4 HP MODELS - UP TO 12' HIGH DOORWAYS - WITHOUT HEAT SECTION									
06712302	36	CFHD36	3288/1120	2672/819	120	1689/603	4.4/4.3	603/192	77
06712402	48	CFHD48	4256/929	4611/906		1662/500	5.9/4.8	586/168	85
06712502	60	CFHD60	4256/924	5763/1126		1652/509	5.2/4.4	708/172	93
	72	2 EA: CFHD36	3288/1120	5344/1638		1689/603	8.8/8.6	1206/384	154
	96	2 EA: CFHD48	4256/929	9222/1812		1662/500	11.8/9.6	1172/336	170
	108	3 EA: CFHD36	3288/1120	8016/2457		1689/603	13.2/12.9	1809/576	231
	120	1 EA: CFHD48	4256/929	9955/2544		1662/500	14.7/13.4	2981/552	239
		2 EA: CFHD36	3288/1120			1689/603			

EXAMPLE					Use the example shown (left) to order unit with heat section by specification
Model #	Unit Width	KW	Volts	Phase	
CFHTR	36	10.0	208	3	

MFG MODEL	HEATER WIDTH	KW	VOLTS	PHASE	HEATER AMPS	MINIMUM CIRCUIT AMPS	MAXIMUM FUSE AMPS	BTU/H	75°C WIRE AWG
CFHTR	36, 48, or 60 Inch Width NOTE: 12KW MAXIMUM ON 36" WIDTH UNITS	3	208	3	8.3	10.4	15	10,239	14
			240		7.2	9.0	15		14
			480		3.6	4.5	15		14
			277	1	10.8	13.5	15		14
			208		14.4	18.0	20		12
			240		12.5	15.6	20		12
		5	208	3	13.8	17.25	20	17,075	12
			240		12.0	15.0	20		12
			480		6.0	7.5	15		14
			277	1	18.0	22.5	25		10
			208		24.0	30.0	35		8
			240		20.8	26.6	30		10
		7.5	208	3	20.8	26.0	30	25,597	10
			240		18.0	22.5	25		10
			480		9.0	11.3	15		14
			277	1	27.0	33.8	40		8
			208		36.0	45.0	50		6
			240		31.2	39.0	45		8
		10	208	3	27.7	34.4	40	34,130	8
			240		24.0	30.1	35		8
			480		12.0	15.0	20		12
			277	1	36.1	45.1	50		6
			240		41.6	52.0	60		6
		12	208	3	33.3	41.6	45	40,956	8
			240		28.8	36.0	40		8
			480		14.4	18.0	20		12
			277	1	43.3	54.1	60		6
		15	208	3	41.6	52.0	60	51,195	6
			240		36.0	36.0	55		6
			480		18.0	18.0	30		10

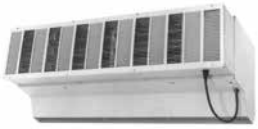

Air Curtain with Heater Module

NOTE: All heating sections are constructed of totally enclosed fin tubular elements for safety and longer operating life. With heating section installed, unit becomes a 24 Volt control unit and can utilize a low voltage thermostat for control of heating.

NOTE: For 72" through 120" units, order multiple heater modules corresponding to the actual air curtain models

ET9 Series - Line Voltage

MFG CATALOG NUMBER	MFG MODEL NUMBER	DESCRIPTION	RANGE	CONNECTIONS	POS. OFF
05238302	AET9DWTS*	DPST Heat Only	50-90°F	Wire Leads	Yes
05238402	AET9SWTS*	SPST Heat Only	50-90°F	Wire Leads	No
05238502	ET9DTS	DPST Heat Only	50-90°F	Terminals	Yes
05238602	ET9D4TS	DPST Heat Only	35-75°F	Terminals	Yes
05238702	ET9DWTS	DPST Heat Only	50-90°F	Wire Leads	Yes
05238802	ET9MTS	2 Stage Heat Only	50-90°F	Terminals	No
05238902	ET9STS	SPST Heat Only	50-90°F	Terminals	No
05239002	ET9S4TS	SPST Heat Only	35-75°F	Terminals	No
05239102	ET9SRTS	SPST Cool Only	50-90°F	Terminals	No
05239202	ET9SWTS	SPST Heat Only	50-90°F	Wire Leads	No
05239302	ETD9MTS	2 Stage Heat, 1 Stg Cool	50-90°F	Terminals	No
05239402	ETD9STS	SPDT Heat or Cool	50-90°F	Terminals	No

*Indicates anticipated models

Features

- Single pole and double pole
- Heat only, cool only, & heat or cool
- DP models include positive off
- Celsius and Fahrenheit temperature scale
- Thermometer standard
- Heating: 22A @120-277VAC resistive
- Cooling: 3/4HP @ 125VAC / 1.5HP @ 250/277 VAC
- Range: 50-90°F (unless otherwise noted)
- Imported to TPI Specifications

RoHS compliant

⚠ **WARNING:** This product can expose you to chemicals including nickel which is known to the State of California to cause cancer, and chromium, which is known to the State of California to cause birth defects and/or reproductive harm. For more information go to www.P65Warnings.ca.gov.

EPET Series and HLT Series Hazardous Location

- Motor Rating (full load): 3/4 HP @ 125V, 1-1/2 HP @ 250V
- Pilot Duty Rating 125VA @ 24VAC
- NEMA Class Seven Div. 1 Approved
- Class I Group C & D, Class II Group E, F, & G
- Not rated for Group B

⚠ **WARNING:** This product can expose you to chemicals including nickel which is known to the State of California to cause cancer, and chromium, which is known to the State of California to cause birth defects and/or reproductive harm. For more information go to www.P65Warnings.ca.gov.

MFG CATALOG NUMBER	MFG MODEL NUMBER	DESCRIPTION	LOAD RATINGS	RANGE
05380702	EPETD8D	DPDT - Bi-Metal	22A @120-277VAC	50-90°F
05381002	EPETD8S	SPDT - Bi-Metal	22A @120-277VAC	50-90°F
05280702	EPETP8D	DPDT - Bi-Metal	22A @120-480VAC	50-90°F
05280602	EPETP8S	SPDT - Bi-Metal	22A @120-480VAC	50-90°F
05231502	HLT-1	SPDT - Capillary	22A @120-277VAC	40-110°F
05231602	HLT-2	DPDT - Capillary	22A @120-277VAC	40-110°F
Master ctn: 4 pcs, 24 lbs (varies slightly by model), 16” x 14.5” x 6”				
EPET Series incorporate plastic knob & Bi-Metal Sensor housing.				
HLT Series incorporates screwdriver temperature adjustment slot and all metal housing. External bulb and capillary sensor.				

Features

- SPDT & DPDT Models
- Heat or cool compatible
- Celsius and Fahrenheit temperature scale
- Bi-Metal or capillary sensor
- Snap action switch
- Casting tapped top and bottom for ¾” conduit
- ½” thick cast aluminum housing
- All EPET optional thermostats manufactured with anti-static plastic
- Dimension 5.75” x 6.375” x 5.57”
- Made in U.S.A.

2000 Series - Line Voltage

MFG CATALOG NUMBER	MFG MODEL NUMBER	COLOR	DESCRIPTION
05028402	S2022H10AA	Shadow White	Single Pole with leads, 22 Amp
05024302	S2022H10AB	Ivory	
05028502	D2022H10BA	Shadow White	Double pole with leads, 22 Amp
05024402	D2022H10BB	Ivory	
05029102	S2025H10AA	Shadow White	Single Pole with leads, 25 Amp
05029202	D2025H10BA	Shadow White	Double pole with leads, 25 Amp

Features

- Shadow White or Ivory
- Single pole and double pole
- DP models include positive off
- 22 Amps, 277 Volts AC
- Heat Only / Range: 50-90°F
- Imported to TPI Corporation specifications
- Compliant with RoHS2 Directive (2011/65/EU), that of which includes the application exemptions outlined in Annex III of the directive

Intertek

RoHS compliant

⚠ **WARNING:** This product can expose you to chemicals including nickel which is known to the State of California to cause cancer, and chromium, which is known to the State of California to cause birth defects and/or reproductive harm. For more information go to www.P65Warnings.ca.gov.

TW Series

Features

- Single and double pole models
- Wire leads
- Tamper resistant
- Compliant with RoHS2 Directive (2011/65/EU), that of which includes the application exemptions outlined in Annex III of the directive
- Imported to TPI Corporation specifications

MFG CATALOG NUMBER	MFG MODEL NUMBER	DESCRIPTION	TEMPERATURE SCALE
05020002	TW145	SP, Beige with Leads	Tamper Resistant / 50-90°F
05020102	TW146	DP, Beige with Leads	Tamper Resistant / 50-90°F
Master Carton: 25 Pcs, 12 lbs. (varies slightly by model), 16” x 14” x 5.5”			

WARNING: This product can expose you to chemicals including nickel which is known to the State of California to cause cancer, and chromium, which is known to the State of California to cause birth defects and/or reproductive harm. For more information go to www.P65Warnings.ca.gov.

Washdown Series

Features

- Single and double pole models
- Rain tight NEMA 4X rating
- Stainless steel hardware
- Coil capillary temperature sensor
- Made in U.S.A. with domestic and foreign components

TW

CTW

MFG CATALOG NUMBER	MFG MODEL NUMBER	DESCRIPTION	TEMPERATURE SCALE	CONNECTION
05234202	TW155A	SPDT Heat or Cool	40-110°F	6" Wire Leads
05234302	TW255A	DPDT Heat or Cool	40-110°F	
22 Amps Resistive @ 120/250/277 VAC, 5” x 5” x 3” Case				

MFG CATALOG NUMBER	MFG MODEL NUMBER	DESCRIPTION	TEMPERATURE SCALE	CONNECTION
05234502	CTW155B	SPST Heat Only	40-110°F	6' Cord
05234602	CTW155C	SPST Heat Only	40-110°F	
13 Amps @ 125 VAC Res. / 58.8 LRA @ 125 VAC / 9.8 FLA @ 125 VAC				

WARNING: This product can expose you to chemicals including nickel which is known to the State of California to cause cancer, and chromium, which is known to the State of California to cause birth defects and/or reproductive harm. For more information go to www.P65Warnings.ca.gov.

Industrial Series

Features

- Coil capillary (CKT) models
- Bi-Metal models (KT)
- Rugged steel case
- SPST & SDPT models
- Compliant with RoHS2 Directive (2011/65/EU), that of which includes the application exemptions outlined in Annex III of the directive. (KT models only)
- Hard wired models rated for 22A resistive @125-250 VAC
- Corded models rated for 13A resistive @125VAC
- Imported to TPI Corporation specifications

MFG CATALOG NUMBER	MFG MODEL NUMBER	DESCRIPTION	RANGE	CONNECTIONS	SCALE
05340402	CKTD110	SPDT Heat or Cool	40 - 110°F	Wire Leads	F
05340802	KT110	SPST Heat Only	-10 - 100°F	Wire Leads	C & F
05341002	KT121	SPST Heat Only	-10 - 100°F	6’ Cord/Plug	C & F
05341702	KTD110	SPDT Heat or Cool	-10 - 100°F	Wire Leads	C & F
05343602	KTO110	SPST Cool Only	-10 - 100°F	Wire Leads	C & F
05342102	KTO121	SPST Cool Only	-10 - 100°F	6’ Cord/Plug	C & F
Master Carton: 13.75” x 14” x 9”, Qty 9-12, 14lbs.-16lbs. depending on model					

WARNING: This product can expose you to chemicals including nickel which is known to the State of California to cause cancer, and chromium, which is known to the State of California to cause birth defects and/or reproductive harm. For more information go to www.P65Warnings.ca.gov.

Honeywell Line Voltage Thermostats

⚠ **WARNING:** This product can expose you to chemicals including nickel which is known to the State of California to cause cancer, and chromium, which is known to the State of California to cause birth defects and/or reproductive harm. For more information go to www.P65Warnings.ca.gov.

Features

- Heat only thermostats
- Accurate temperature control
- 22 Amp resistive for mechanical models

T4398A 1021
Precision Mechanical

Standard Models

MFG CATALOG NUMBER	MFG MODEL NUMBER	VOLTAGE	DIMENSIONS	DESCRIPTION
05033002	T4398A 1021	120-240	2.875”x4.375”x2.00D	Precision Electric Heating. SPST, 50-80°F, 22 Amp @ 120-240V, 19 Amp @ 277V

Programmable Honeywell Line Voltage Thermostat

⚠ **WARNING:** This product can expose you to chemicals including nickel which is known to the State of California to cause cancer, and chromium, which is known to the State of California to cause birth defects and/or reproductive harm. For more information go to www.P65Warnings.ca.gov.

Features

- Heat only thermostats
- Accurate temperature control
- 16 Amp resistive for electronic models
- Energy Star compliant

TL8230A 1003
Electronic Programmable

Standard Models

MFG CATALOG NUMBER	MFG MODEL NUMBER	VOLTAGE	DIMENSIONS	DESCRIPTION
05033602	TL8230A 1003	240/208	2.70”x4.90”x.90D	Electronic Programmable Line Voltage DPST, 15 Amp, 40-86°F

UT Series - Low Voltage

Features

- Vertical or horizontal mounting
- Long life sealed contacts
- Does not contain Mercury
- Leveling not required
- Fahrenheit and Celsius temperature scales
- Compliant with RoHS2 Directive (2011/65/EU), that of which includes the application exemptions outlined in Annex III of the directive
- 2-3°F rated differential
- Anticipator (except UT9001)
- Imported to TPI Corporation specifications

⚠ **WARNING:** This product can expose you to chemicals including nickel which is known to the State of California to cause cancer, and chromium, which is known to the State of California to cause birth defects and/or reproductive harm. For more information go to www.P65Warnings.ca.gov.

Standard Models

MFG CATALOG NUMBER	MFG MODEL NUMBER	DESCRIPTION	VOLTAGE	TERMINALS	SWITCHES	ANTICIPATOR
05230502	UT1001	Heat Only	24VAC or MV	R &W	None	Yes
05230602	UT3001	Cool Only	24 VAC	R, Y & G	Cool/Off Fan/Auto	Yes
05230702	UT8001	Heat/Cool	24 VAC	RC, RH, W, Y, & G	Heat/Off/Cool Fan/Auto	Yes
05231102	UT9001*	Heat Only	Millivolt	R & W	None	No
Master Carton: 50 pcs, 17 lbs, 19” x 11.5” x 9”						

*Not UL Listed

RK Series - Low Voltage

Features

- Heat only models
- Positive off
- 2-3°F rated differential
- Compliant with RoHS2 Directive (2011/65/EU), that of which includes the application exemptions outlined in Annex III of the directive
- Does not contain Mercury
- Leveling not required
- Long life sealed contacts
- Fahrenheit and Celsius
- Imported to TPI Corporation specifications

Standard Models

MFG CATALOG NUMBER	MFG MODEL NUMBER	DESCRIPTION	VOLTAGE	RANGE	ANTICIPATOR
05260102	RK120EAA	Heat Only	24VAC or MV	50°-90°F	Yes
05262002	RK124EAA	Heat Only	24VAC or MV	35°-75°F	Yes
05260502	RK130EAA*	Heat Only	Millivolt	50°-90°F	No
05263202	RK134EAA*	Heat Only	Millivolt	35°-75°F	No
05261402	RKWP1AA*	Wall Plate	NA	NA	NA
Master Carton: 100 Pcs, 24 lbs, 16.5” x 15” x 8”					

*Not UL Listed

⚠ **WARNING:** This product can expose you to chemicals including nickel which is known to the State of California to cause cancer, and chromium, which is known to the State of California to cause birth defects and/or reproductive harm. For more information go to www.P65Warnings.ca.gov.

SDHW1001

Fully Automatic Setback!
No Programming!

⚠ **WARNING:** This product can expose you to chemicals including nickel which is known to the State of California to cause cancer, and chromium, which is known to the State of California to cause birth defects and/or reproductive harm. For more information go to www.P65Warnings.ca.gov.

Features

The SD Series of Clever Comfort Thermostats are self learning setback thermostats designed specifically for commercial and industrial applications. Unlike most setback thermostats this thermostat doesn't require programming. With the use of a motion sensor, it learns your schedule, and changes automatically with schedule changes. Regardless of your schedule, it automatically returns to economy after you leave.

The Clever Comfort Smart Recovery feature returns the system to the comfort temperature before you arrive. The holiday feature automatically returns to economy setting on any day that no-one shows up.

Compatible with single and multistage equipment up to 4 stages of Heat, 4 Stages of Cool, or any combination of Heat and Cool up to 4 stages, including 2 Stage Heat, 1 Stage Cool Heat pumps.

SDHW1001: Hardwired Thermostat: Catalog# 05236402

The SDHW thermostats are wired directly to the HVAC system. The SDHW1001 model is compatible with 26 types of 24VAC systems. Simply choose your system on setup, apply the corresponding terminal strip label and wire as you would any other thermostat.

SDHW1002: E2 Extended Energy Saver Hardwired Thermostat: Catalog# 05347002

The SDHW E2 thermostat extends the savings over the standard SDHW1001 by limited temperature ranges, and incorporating a minimum offset of 5 degrees. The SDHW1002 does not allow heat mode temperature settings above 74 degrees Fahrenheit or cool mode settings below 72 degrees Fahrenheit. This allows employers to give their employees control of the temperature setting while preventing abuse.

Standard Models

MFG CATALOG NUMBER	MFG MODEL NUMBER	DESCRIPTION	VOLTAGE	CONNECTIONS
05236402	SDHW1001	SD Wired Thermostat	2 AA Batteries or 24VAC	Varies by System
05347002	SDHW1002	Extend Energy Saver Model	2 AA Batteries or 24VAC	Varies by System

Customization Options

We have the ability to customize the SD thermostats in ways that none of our competition can. These customizable capabilities allows us to redefine the thermostat's features for your application. Below are the features that can be customized. Contact Customer Service for customization form or more information.

System Selection: The standard SD thermostat incorporates the ability to select between 26 types of HVAC equipment upon setup. With the customization option, you select as many or as few of these systems you want available to the installer.

Default System Selection: Choose which model will be the default model upon installation. The Standard SD thermostat has a default model of #111 which is Single Stage Heat/Cool for Gas heat.

Temperature Ranges: The Heat and Cool temperature ranges are completely independent and can be customized to any ranges between 0-200°F. For example, our E2 Extended Energy model incorporates a Heat Range of 50-74°F and a Cool Range of 72-90°F. The heat can never be set above 74, and the cooling can never be set below 72. (Note: A setting above 120°F requires a remote temperature sensor in controlled area.)

Economy Offset Range: The standard model is adjustable from 0-12°F degrees offset. Both the minimum and maximum settings are adjustable from 0-40°F. For example, our E2 Extended Energy Saving model has a minimum offset of 5°F and a maximum of 15°F.

Default Temperature Scale: Default can be Celsius or Fahrenheit. Regardless of default temperature scale, it can be changed at any time by the user.

Set temperature resolution: Select either 0.5 or 1.0 degrees. Standard model allows for setpoint adjustment in 0.5o increments.

Differential: On and Off setpoints for each stage in relationship to setpoint. All setting are selectable in 0.1 degree resolution.

Default Temperature Settings: Standard model settings are 70 degrees for Heat and 74 degrees for Cool.

Deadband Range: Selectable between 1 and 10 degrees. Select both the minimum and maximum amount that the user will be able to select Standard model is adjustable between 1-5°F.

Default Deadband Setting: When first installed this is the deadband setting. The standard model has a default of 2 degrees. Note: Default must be within the deadband range selected above. If the range is 4-8, you can't have a default of 2.

Comfort Duration Times: The comfort duration time is how long the thermostat will remain in comfort after motion has been detected. The factory times are: 10, 30, 60, 90, and 120 minutes. Up to 8 settings are available from 10 to 240 minutes (4 hrs).

Comfort Duration Default Time: One of the settings selected above has to be the default. Standard model default is 60 minutes.

Maximum Manual Economy Time: This is the amount of time the thermostat will ignore all motion once the thermostat is manually placed into the economy mode. This gives everyone time to leave the building (area) once manually placed into economy. Standard model has a time of 30 minutes.

Protection Delays: All of the protection delays are adjustable to the second. We currently have a 5 minute compressor protection delay, a 2 minute heat protection delay, and a 2 minute minimum run time. All three are adjustable independently.

Columbus Electric Displayed: This feature can be disabled.

Low Voltage Relays

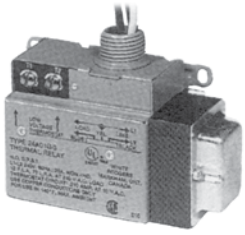

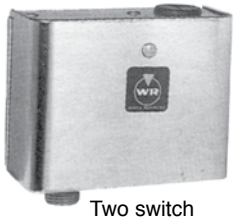

Two switch unit shown

⚠ **WARNING:** This product can expose you to chemicals including nickel which is known to the State of California to cause cancer, and chromium, which is known to the State of California to cause birth defects and/or reproductive harm. For more information go to www.P65Warnings.ca.gov.

Features

- Snap action switch
- ½" male conduit spud
- 45 second average time delay
- Temperature range - 50 - 90°F
- Built-In transformer

Standard Models

MFG CATALOG NUMBER	MFG MODEL NUMBER	PRIMARY VOLTAGE	DESCRIPTION
02600302	24A05A-1	120V	Single Switch, single throw with In-Built Transformer for remote mounting or in a factory provided optional enclosure
02600402	24A05E-1	208V	
02600502	24A01G-3	240V	
02601002	24A06G-1	240V	Two switch, single throw with In-Built Transformer, 25 Amps per switch

Note: 277/24V relay available, consult factory.

Electromechanical De-Humidistat

⚠ **WARNING:** This product can expose you to chemicals including nickel which is known to the State of California to cause cancer, and chromium, which is known to the State of California to cause birth defects and/or reproductive harm. For more information go to www.P65Warnings.ca.gov.

Features

- 7.5 amp @ 125VAC
- 3.75 amp @ 240VAC
- 50VA @ 24VAC - 240VAC
- 20% - 80% relative humidity range

Standard Models

MFG CATALOG NUMBER	MFG MODEL NUMBER	DESCRIPTION
05390602	H46C1166	Dehumidistat/Electromechanical

LB Series - Bi-Metal In-Built Thermostats

LB110

LB210

⚠ **WARNING:** This product can expose you to chemicals including nickel which is known to the State of California to cause cancer, and chromium, which is known to the State of California to cause birth defects and/or reproductive harm. For more information go to www.P65Warnings.ca.gov.

Features

- Bi-Metal sensor
- HP Ratings: 3/4HP @ 125 VAC - 1.5HP @ 250-277 VAC
- 22 Amps resistive max

MFG CATALOG NUMBER	MFG MODEL NUMBER	DESCRIPTION	VOLTAGE	RANGE	CONNECTIONS
05361302	LB110	SPST Heat Only	120-277 VAC	0 - 110°F	6" - 14 Gauge Leads
05362002	LB210	DPST Heat Only			6" - 14 Gauge Leads
Master Carton: 16" x 14.5" x 6", Qty 25-50, 11 lbs. - 14 lbs. depending on model					

LR Series - Bi-Metal Outdoor Thermostats

LRD100A

⚠ **WARNING:** This product can expose you to chemicals including nickel which is known to the State of California to cause cancer, and chromium, which is known to the State of California to cause birth defects and/or reproductive harm. For more information go to www.P65Warnings.ca.gov.

Features

- Bi-Metal sensor
- HP Ratings: 3/4HP @ 125 VAC-1.5HP @ 250-277 VAC
- 22 Amps resistive max

MFG CATALOG NUMBER	MFG MODEL NUMBER	DESCRIPTION	VOLTAGE	RANGE	CONNECTIONS
05363002	LRD100A	SPDT Heat/Cool	120-277 VAC	0 - 110°F	6" - 14 Gauge Leads
Master Carton: 16" x 14.5" x 6", Qty 50, 15 lbs. - 16 lbs. depending on model					

RH Series - Air Flow / Differential Pressure Switch Controls

RH1505D0

RH3, RH35, RH3A

Features

- Senses pressure or vaccum
- Adjustable or fixed pressure
- Compliant with RoHS2 Directive (2011/65/EU), that of which includes the application exemptions outlined in Annex III of the directive
- Automatic reset
- Tube, barbed, or compression fittings

MFG CATALOG NUMBER	MFG MODEL NUMBER	PRESSURE SET	VOLTAGE	RANGE	CONNECTIONS
05460702	RH1505D0	Fixed	120-277 VAC	0.05” WC	Tube (both sides)
05462102	RH3	Adjustable		0.05” - 12” WC	Barbed (both sides)
05462302	RH35	Adjustable		0.05” - 2.0” WC	Barbed (both sides)
05463102	RH3A	Adjustable		0.05” - 12” WC	Compression (both sides)
Master Carton (RH1505D0): 25.5” x 17.75” x 13.5”, Qty 48, 36 lbs. Master Carton (RH3, RH35, RH3A): 15.25” x 15” x 14”, Qty 24, 28-32lbs depending on model					

WARNING: This product can expose you to chemicals including nickel which is known to the State of California to cause cancer, and chromium, which is known to the State of California to cause birth defects and/or reproductive harm. For more information go to www.P65Warnings.ca.gov.

Pilot Tubes (for RH Series Air Flow / Differential Pressure Switch Controls)

1

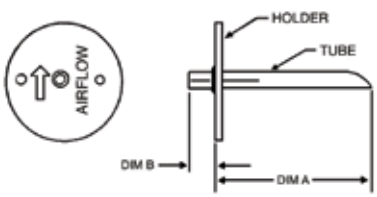

2

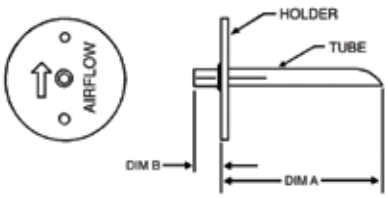

3

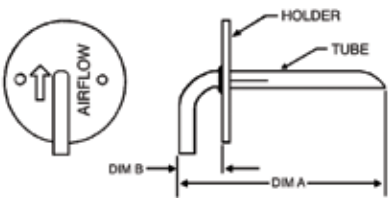

WARNING: This product can expose you to chemicals including nickel which is known to the State of California to cause cancer, and chromium, which is known to the State of California to cause birth defects and/or reproductive harm. For more information go to www.P65Warnings.ca.gov.

MFG CATALOG NUMBER	MFG MODEL NUMBER	“A” DIMENSION	“B” DIMENSION	FIGURE #
94228027	61-01730-00	4.29”	0.69”	1
94227003	61-01730-003	6.69”	0.69”	1
94228000	61-01729-00	4.00”	0.50”	2
94228020	61-01729-20	2.00”	0.50”	2
94228021	61-01729-21	1.50”	0.50”	2
94228022	61-01729-22	6.00”	0.50”	2
94227000	61-01729-27	3.50”	0.50”	3

TG Series Thermostat Guards

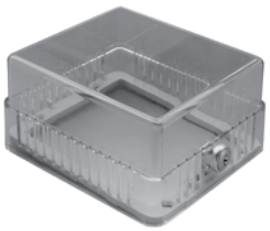

Features

- 8 tumbler locks
- Imported to TPI specifications

WARNING: This product can expose you to chemicals including nickel which is known to the State of California to cause cancer, and chromium, which is known to the State of California to cause birth defects and/or reproductive harm. For more information go to www.P65Warnings.ca.gov.

Standard Models

MFG CATALOG NUMBER	MFG MODEL NUMBER	DESCRIPTION
05891202	TG1	Plastic Stat Guard/ 6.25” x 4.25” x 3.25” Opening
05891002	TG1B	Metal Stat Guard/ 5.25” x 4.625” x 3” Opening
05891302	TG2	Plastic Stat Guard/ 5.25” x 5.25” x 3.25” Opening
05891102	TG3	Plastic Stat Guard/ 8.125” x 5.37” x 3.25” Opening
05891702	TG3B	Metal Stat Guard/ 6.75” x 4.50” x 3.50” Opening
05236102	TG4	Plastic Stat Guard / 3.75” x 3.937” x 1.75” Opening
05236202	TG5	Plastic Stat Guard / 5” x 3.31” x 1.75” Opening
05236302	TG6	Plastic Stat Guard / 5.75” x 4.625” x 1.75” Opening

Thermal Area Treatment Heater Accessories

Accessories

MFG CATALOG NUMBER	MFG MODEL NUMBER	DESCRIPTION	HP	CFM / RPM	MAX AMPS	VOLTS	WT. (LBS)
03976302	TAT-24-FAN-120V-1	Thermal Area Treatment Floor Fan	1/3	5000/1160	3.1	120	30

MFG CATALOG NUMBER	MFG STYLE MODEL NUMBER	DESCRIPTION	KW	BTUs	VOLTS	PHASE	AMPS	TEMP RISE	WT. (LBS)
03981902	TAT-30/1T	30KW Salamander	30	102390	480	3	36	43	115
03982002	TAT-45/1T	45KW Salamander	45	153585	480	3	54.2	70	125

Product Dimensions

TAT 30-45

- Safety yellow heater enclosure with safety screens on both air intake and output openings
- Optional 25' long SO type cord, ready for plug attachment is available for each model
- Long-life finned tubular heating elements
- Thermostat adjustment 115° to 150° F
- Two 10" rear wheels and a front locking caster
- High-limit thermal cutout switch with manual reset
- 2200 CFM
- Fan only operation feature
- Made in U.S.A.

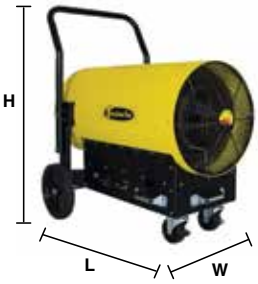

TAT-24-FAN-120V-1

- Single speed
- Head tilts 360°
- Coated steel guards
- SJT type 3 conductor
- Steel hub / Aluminum blades
- Meets OSHA standards
- Made in U.S.A. with domestic and foreign components

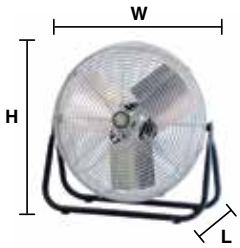

MFG MODEL NUMBER	DIMENSIONS			WT. (LBS)
	LENGTH	WIDTH	HEIGHT	
TAT 30, 45	37"	24"	39"	115/125
TAT24-FAN-120V-1	10.5"	26"	26"	30

⚠ **WARNING:** This product can expose you to chemicals including nickel which is known to the State of California to cause cancer, and chromium, which is known to the State of California to cause birth defects and/or reproductive harm. For more information go to www.P65Warnings.ca.gov.

HR Series Hot Room Heaters

MFG CATALOG NUMBER	MFG MODEL NUMBER	VOLTAGE - PHASE	KW HEATING	CABINET DIMENSIONS H X W X L (IN)	MOTOR HP	TOTAL AMPS	CFM	TEMP RISE
03967302	HR-F1-7	208 / 1	7	18 x 22 x 36	1/3	36	1800	13.4
03967402	HR-F3-8.5	208 / 3	8.5	18 x 22 x 36	1/3	25	1800	16.3
03967502	HR-F3-12.2	208 / 3	12.2	18 x 22 x 36	1/3	35	1800	23.4
03967602	HR-H1-8.1	240 / 1	8.1	18 x 22 x 36	1/3	36	1800	15.5
03967702	HR-H3-8.5	240 / 3	8.5	18 x 22 x 36	1/3	23	1800	16.3
03967802	HR-H3-14.1	240 / 3	14.1	18 x 26 x 36	3/4	36	2200	22.1
03967902	HR-P3-10.0	480 / 3	10.0	18 x 22 x 36	3/4	14	1800	19.2
03968002	HR-P3-15.0	480 / 3	15.0	18 x 26 x 36	3/4	20	2200	23.5
03968102	HR-P3-20.0	480 / 3	20.0	18 x 26 x 36	3/4	26	2200	31.4
03968202	HR-P3-24.0	480 / 3	24.0	18 x 26 x 36	3/4	31	2200	43.9
03968302	HR-P3-20.0-2	480 / 3	20.0	18 x 26 x 36	3/4	26	2200	31.4
44597001	Remote Stat	24V	1-stage	w/8' cap.	Range up to 150°F			
44597002	Remote Stat	24V	2-stage	w/8' cap.	Range up to 150°F			

Specifications and Additional Information

- High-temperature rated, ball bearing motor; forward curved centrifugal blower; standard with airflow switch, temperature limit controls (manual and automatic resets), and lockable disconnect switch with fuse block
- Galvannealed 20 Gauge heavy-duty metal housing
- Totally enclosed, finned tubular stainless steel heating elements, provide the benefits of closer temperature regulation, less chance of shock hazards, less susceptibility for shorting, easy service, and will better withstand physical abuse
- Capability of mounting for in-room use, or mounting at an external wall/ceiling, with the heat inlet/outlet ducted to/from the room. 1" duct flanges at inlet and discharge ends are standard, to provide for ducting on the unit
- All models listed are designed for permanent mounting and hard wiring
- A typical hot room should be totally enclosed, with provisions made to keep air from escaping, other than the air being ducted thru the heater itself when the unit is mounted outside the room. As always, insulation should be considered for walls and ceiling, to maximize energy efficiency and heater performance

⚠ **WARNING:** This product can expose you to chemicals including nickel which is known to the State of California to cause cancer, and chromium, which is known to the State of California to cause birth defects and/or reproductive harm. For more information go to www.P65Warnings.ca.gov.

Hotpod® Supplemental Duct Mounted Heating System

HotPod - Features

- Use to heat cold rooms or additions without upgrading central system
- Fan only operation for increased cfm output for A/C cycles
- 6" 1000/500 Watt and 8" 1440/720 Watt models available
- Two stage operation
- 120V corded and hard wire models available
- 10' Cord length on corded models
- Zero clearance for all models
- All models include UT8003 low voltage thermostat
- Optional wireless thermostat
- Silent boot option available for rigid duct applications only
- Made in U.S.A. with domestic and foreign components
- Patented: Patent No. 8,285,127, 8,625,976, 8,787,738

Intertek

⚠ **WARNING:** This product can expose you to chemicals including nickel which is known to the State of California to cause cancer, and chromium, which is known to the State of California to cause birth defects and/or reproductive harm. For more information go to www.P65Warnings.ca.gov.

Standard HotPod® Models

MFG CATALOG NUMBER	MFG MODEL NUMBER	DESCRIPTION	WATTS	VOLTS	MIN.CIRC. SIZE (AMP)	TEMP RISE (F)	WT. (LBS)	RPM	CFM	NEMA PLUG	DIMENSION L x W x H (In.)
02900702	HP6-1000120-2T	6” INLET, HARDWIRE	1000/500	120	8.33	26	4	1500	130	NA	10 ½ x 8 ½ x 6
02900402	HP6-1000120-2CT	6” INLET, WITH CORD SET	1000/500	120	8.33	26	4	1500	130	5-15P	10 ½ x 8 ½ x 6
02900802	HP8-1440120-2T	8” INLET, HARDWIRE	1440/720	120	12.6	23	6	1500	210	NA	11 x 10 ½ x 8
02900602	HP8-1440120-2CT	8” INLET, WITH CORD SET	1440/720	120	12.6	23	6	1500	210	5-15P	11 x 10 ½ x 8

SilentBooster® Supplemental Duct Mounted Boosting System

SilentBooster® - Features

- 120V corded and hardwire models available
- Adds 120 CFM Boost to duct heating or ventilation applications
- Can utilize optional TPI SilentBoot™ for whisper quiet operation in rigid duct application
- 14” of duct, 4’ from register is all that is needed for installation
- Optional wireless thermostat can be utilized to control SilentBooster to increase room comfort

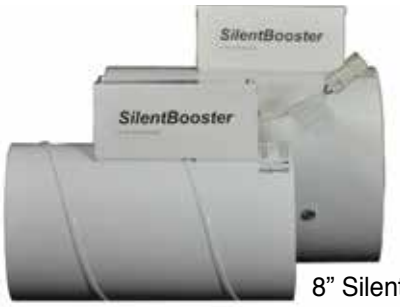

6” SilentBooster®

8” SilentBooster®

Intertek

Moisture Control System - Features

- 120V, 8” Ducted Booster Fan; De-humidistat included
- Includes all ductwork and outside damper / 6” to 8” adapters available
- Uses Heavy Duty booster fan to eliminate humidity from basements, crawl spaces, or damp areas
- Made in U.S.A. with foreign and domestic componets

⚠ **WARNING:** This product can expose you to chemicals including nickel which is known to the State of California to cause cancer, and chromium, which is known to the State of California to cause birth defects and/or reproductive harm. For more information go to www.P65Warnings.ca.gov.

Standard SilentBooster® Models

MFG CATALOG NUMBER	MFG MODEL NUMBER	DESCRIPTION	VOLTS	MIN.CIRC. SIZE (AMP)	WT. (LBS)	RPM	CFM	NEMA PLUG	DIMENSION L x W x H (In.)
02903702	SB6-120-T	6” SilentBooster (Hardwire)	120	15	4	1500	130	NA	10 ½ x 8 ½ x 6
02903802	SB6-120-CT	6” SilentBooster (w/Cord Set)	120	15	4	1500	130	5-15P	10 ½ x 8 ½ x 6
02903902	SB8-120-T	8”SilentBooster (Hardwire)	120	15	4	1500	210	NA	11 x 10 ½ x 8
02904002	SB8-120-CT	8” SilentBooster (w/Cord Set)	120	15	4	1500	210	5-15P	11 x 10 ½ x 8
MOISTURE CONTROL SYSTEM									
02904102	MCS120-8CT	8” Moisture Control System	120	15	4	1500	210	5-15P	11 x 10 ½ x 8

Hotpod Accessories And Thermostat

MFG CATALOG NUMBER	MFG MODEL NUMBER	DESCRIPTION	WT. (LBS)
02900902	SB-6*	6” SILENT BOOT	4
02901002	SB-8*	8” SILENT BOOT	4
05235702	RFKIT-5	WIRELESS TRANSMITTER	6

*Can be used with Hotpod models as a noise attenuator

WARNING: This product can expose you to chemicals including nickel which is known to the State of California to cause cancer, and chromium, which is known to the State of California to cause birth defects and/or reproductive harm. For more information go to www.P65Warnings.ca.gov.

RFKIT-5 - Patent Pending

Hotpod Ready-Pack Self Contained Systems

Features

- Includes all you need to install a complete Hotpod system
- Ideal for room or office additions
- RF Thermostat is standard with our Ready-Pack models, simplifying installation even further - Eliminates the need for thermostat wiring
- Same specifications for 6” and 8” Hotpod models apply to Ready-Pack models

WARNING: This product can expose you to chemicals including nickel which is known to the State of California to cause cancer, and chromium, which is known to the State of California to cause birth defects and/or reproductive harm. For more information go to www.P65Warnings.ca.gov.

What’s Included

- 6” or 8” Hotpod with RFKIT-5 wireless thermostat and transmitter
- One outlet and one return air grill
- Two 90 degree elbows
- Flexible duct (12.5’)
- 8" models include 2 reducers - 8” to 6”

Ready-Pack self contained system
Note: does not mount to exsisting duct work.

MFG CATALOG NUMBER	MFG MODEL NUMBER	DESCRIPTION
02902702	HP6-1000120-2TRP	6” INLET, 1000W, 120V, READY-PACK
02902802	HP6-1000120-2CTRP	6” INLET, 1000W, 120V, READY-PACK WITH CORDSET
02902902	HP8-1440120-2TRP	8” INLET, 1440W, 120V, READY-PACK
02903002	HP8-1440120-2CTRP	8” INLET, 1440W, 120V, READY-PACK WITH CORDSET

MFH Series Hotpod - For those LARGER areas

WARNING: This product can expose you to chemicals including nickel which is known to the State of California to cause cancer, and chromium, which is known to the State of California to cause birth defects and/or reproductive harm. For more information go to www.P65Warnings.ca.gov.

Features

- For units supplied with cord: 120V 6' with NEMA 5-15P plug; 240V 6' with NEMA 6-15P plug
- Unit contains air flow switch
- Zero inch (0”) clearance installation
- All units are shipped with our UT8003 low voltage thermostat
- All units obtain a 33 degree temperature rise
- RP models are Ready-Pack models and do not need existing duct work
- Made in U.S.A.

Standard Models

MFG CATALOG NUMBER	MFG MODEL NUMBER	DESCRIPTION	WATTS	VOLTS	WT. (LBS)	CFM	RPM
02901302	MFHE-0300-6-EAA	6" INLETS, 1500 W, 120V, 2 STAGE THERMOSTAT	1500	120	132	250	1500
02901902	MFHE-0300-6-EAARP	UNIT ABOVE WITH FLEX, BOOTS, GRILLS	1500	120	145	250	1500
02901402	MFHE-0300-6-EAAC	6" INLETS, 1500 W, 120V,2 STAGE THERMOSTAT, CORD	1500	120	132	250	1500
02902002	MFHE-0300-6-EAACRP	UNIT ABOVE WITH FLEX, BOOTS, GRILLS	1500	120	145	250	1500
02901702	MFHE-0300-6-HAA	6" INLETS, 2000W, 240V, 2 STAGE THERMOSTAT	2000	240	132	250	1500
02902302	MFHE-0300-6-HAARP	UNIT ABOVE WITH FLEX, BOOTS, GRILLS	2000	240	145	250	1500
02901502	MFHE-0300-8-EAA	8" INLETS, 1500W, 120V, 2 STAGE THERMOSTAT	1500	120	135	250	1500
02902102	MFHE-0300-8-EAARP	UNIT ABOVE WITH FLEX, BOOTS, GRILLS, REDUCERS	1500	120	148	250	1500
02901602	MFHE-0300-8-EAAC	8" INLETS, 1500W, 120V, 2 STAGE THERMOSTAT,CORD	1500	120	135	250	1500
02902202	MFHE-0300-8-EAACRP	UNIT ABOVE WITH FLEX, BOOTS, GRILLS, REDUCERS	1500	120	148	250	1500
02901802	MFHE-0300-8-HAA	8" INLETS, 3000W, 240V, 2 STAGE THERMOSTAT	3000	240	135	250	1500
02902402	MFHE-0300-8-HAARP	UNIT ABOVE WITH FLEX, BOOTS, GRILLS, REDUCERS	3000	240	148	250	1500

Fresh Air Make Up Units - Features

- Can be used with existing systems for fresh air intake
- Includes replaceable filter
- All units include duct stat and disconnect switch
- Available with 6" inlet and outlet only

Standard Models

MFG CATALOG NUMBER	MFG MODEL NUMBER	DESCRIPTION	CFM	RPM
02902502	MFHE-0300-6-HAAF2D	6" INLETS, 3000W, 240V, FILTER, DUCT STAT	250	1500
02902602	MFHE-0300-6-FAAF2D	6" INLETS, 2000W, 208V, FILTER, DUCT STAT	250	1500

5700 Series Confined Space Plenum Rated Heater

Features

- Easily fits between joists for typical installation
- Zero clearance for wall and ceiling mounting as well as floor mounting with appropriate inlet and outlet clearances
- Bracket standard or can be mounted by ⅜" threaded rod (field supplied)
- Automatic reset thermal limit for safety
- 1 Phase model wattage field changeable from 1874 to 5000 Watts
- 24V control circuit on three phase models with hydraulic thermostat
- Made in U.S.A

Conforms to ANSI/UL 1995
Certified to CAN/CSA C 22.2 No.236-11

**5700 Series Confined Space Plenum Rated Heater can also be found on page 22, including Product Dimensions

Intertek

⚠ **WARNING:** This product can expose you to chemicals including nickel which is known to the State of California to cause cancer, and chromium, which is known to the State of California to cause birth defects and/or reproductive harm. For more information go to www.P65Warnings.ca.gov.

Standard Models

MFG CATALOG NUMBER	MFG MODEL NUMBER	WATTS	BTUs	VOLTS	PHASE	AMPS	TEMP RISE	TEMP RANGE	AIR THROW	CFM	WT. (LBS)
07262402	HF5705T	5000	17065	240	1	21	57 °F	(40 °F-120 °F)	16'	275	32
		4165	14215			17	48 °F				
		3332	11365			14	38 °F				
		2500	8533			10	29 °F				
		3750	12798	208	1	18	43 °F	(40 °F-120 °F)	16'	275	32
		3123	10659			15	36 °F				
		2500	8553			12	29 °F				
		1874	6396			9	21 °F				
07262502	H3H5705T	3750	12799	208	3	10.4	57 °F	(40 °F-110 °F)	16'	275	32
		5000	17065	240	3	12	57 °F		16'	275	32
07262602	P3P5705T	5000	17065	480	3	6	57 °F	(40 °F-110 °F)	16'	275	32
07073602	DCS-MT303	Optional Field Installed Disconnect Switch, 30 Amp @ 600Volts									

7200 Series Plenum Heater

HOW TO DESIGNATE A MODEL:

F	3	G	72	15	2	T
Element Voltage F = 208V H = 240V G = 277V P = 480V	Phase 1 = Single Phase 3 = Three Phase	Motor Voltage G = 277 P = 480	Series Number	Element KW 3KW through 50KW See model chart for KW options.	Heater Stages Blank = One 2 = Two	Control System Blank = None T = Unit Thermostat SSR = SSR Control

Intertek

⚠ **WARNING:** This product can expose you to chemicals including nickel which is known to the State of California to cause cancer, and chromium, which is known to the State of California to cause birth defects and/or reproductive harm. For more information go to www.P65Warnings.ca.gov.

*SSR proportional control maximum: 45 Amps
**SSRs require a 0-10vDC, 4-20mA, or 0-135Ω field supplied signal or an optional VT7225 thermostat

Product Specifications

- 20 gauge galvanized cabinet
- Variable speed motor, factory set at maximum
- Motor speed can be field adjusted to increase heat rise
- Acoustically insulated with 1" fiberglass
- Access panels on both sides of cabinet
- 24 Volt controls. / Disconnect switch
- Air flow switch
- Terminal blocks
- 0" Clearance on sides, top, and bottom
- Single point connection
- Dust tight control enclosure
- Filter rack on inlet with throw away filter
- Inlet and outlet screens and duct connection
- Automatic primary limit control and secondary fuse link
- Optional wall thermostat, unit thermostat or SSR control which proportionally regulates heat output
- Made in U.S.A.

7200 Series Plenum Heater Standard Models

MFG CATALOG NUMBER	MFG MODEL NUMBER	KW	CFM RANGE	VOLTS / PHASE	TOTAL AMPS for MOTOR & HEATER	STAGE	MOTOR VOLTAGE	FULL LOAD AMPS for MOTOR ONLY	MOTOR H.P.	WT. (LBS)
06176802	F1G7203	3	70-270	208/1	15.4	1	277	1	1/15	98
06065602	H1G7203			240/1	13.5					
06062402	G1G7203			277/1	11.83					
06069002	F3G7203			208/3	9.32					
06177602	H3G7203			240/3	8.21					
06176602	F1G7205	5	200-650	208/1	25.13	1	277	1.1	1/6	118
06179502	H1G7205			240/1	21.93					
06061602	G1G7205			277/1	19.15					
06064202	F3G7205			208/3	14.97	1				
06179902	H3G7205			240/3	13.12					
06065002	P3P7205			480/3	7.11		480	.90	¼	
06065502	F3G7210	10	500-1200	208/3	33.05	1	277	2.50	1/4	141
05348702	H3G7210			240/3	25.75			1.7		
06175802	P3P7210			480/3	13.72		480			
06065102	F3G7210-2			208/3	33.05	2	277	2.50		
05343902	H3G7210-2			240/3	25.75			1.7		
06063402	P3P7210-2			480/3	13.72		480	.90		
06086002	F3G7215	15	500-1200	208/3	46.93	1	277	2.50		
06088402	H3G7215			240/3	37.78			1.7		
06060702	P3P7215			480/3	19.74		480	.90		
06069402	F3G7215-2			208/3	46.93	2	277	2.50		
05344002	H3G7215-2			240/3	37.78			1.7		
05345502	P3P7215-2			480/3	19.74		480	.90		
06088302	F3G7220-2	20	750-1600	208/3	63.81	2	277	3.1	1/2	163
05344102	H3G7220-2			240/3	50.61			2.5		
06064902	P3P7220-2			480/3	26.55		480	2.0		
05344202	F3G7223-2	23	1300-2000	208/3	74.84	2	277	11	3/4	201
06178802	H3G7223-2			240/3	59.63			4.3		
05345602	P3P7225-2	25		480/3	34.37		480	2.2		
05344302	H3G7230-2	30	1800-2800	240/3	78.47	2	277	8.0	2 MOTORS @ 1/2 H.P. EACH	278
06068802	P3P7230-2			480/3	42.38		480	4.0		
05345702	P3P7235-2	35		480/3	48.39					
05345802	P3P7240-2	40	2000-3600	480/3	56.71	2	480	4.4	2 MOTORS @ 3/4 H.P. EACH	319
05345902	P3P7245-2	45		480/3	62.72					
06180802	P3P7250-2	50		480/3	68.74					

Note: Products listed in this section are custom built and subject to 100% cancellation/restock charges.

Product Dimensions

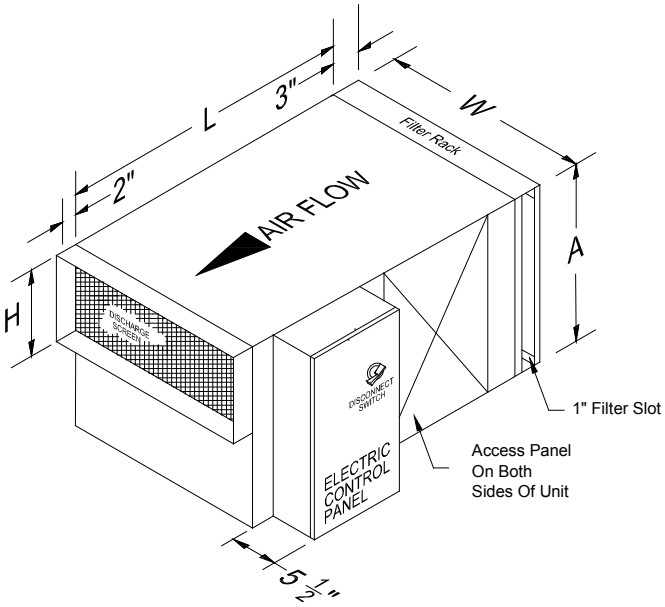

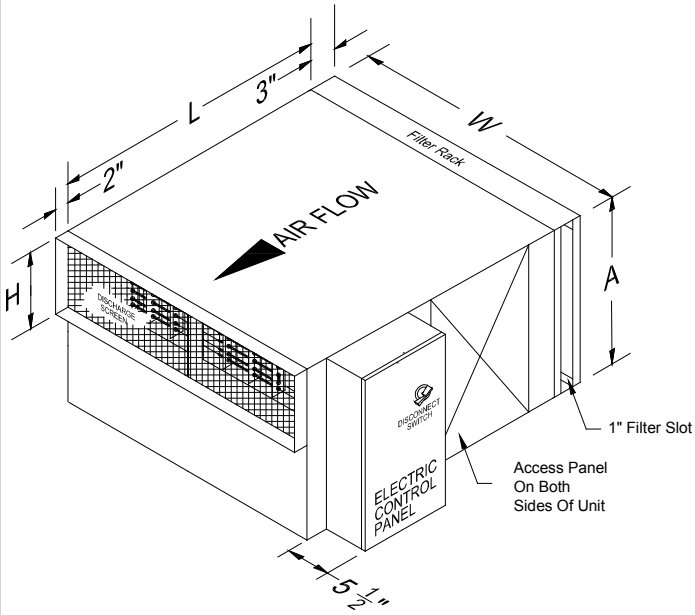

DIMENSIONS				
7200 SERIES	A	L	DISCHARGE	
			W	H
3 KW	12”	32”	14”	8”
5 KW	14”	36”	18”	8”
10 & 15 KW	18”	36”	18”	10”
20 KW	18”	36”	22”	10”
23 & 25 KW	18”	36”	26”	10”

DIMENSIONS			
7200 SERIES	A	W x H	L
25-30-35 KW	18”	44” x 10”	36”
40-45-50 KW	18”	52” x 10”	36”

Note: Control panel access standard as shown. For panel on opposite side access specify and order (Figure 5). * Control box depth depends on actual components. Consult factory for exact dimensions.

HOW TO DESIGNATE A MODEL:

F	3	G	73	15	2	T
Element Voltage F = 208V H = 240V G = 277V P = 480V	Phase 1 = Single Phase 3 = Three Phase	Motor Voltage G = 277 P = 480	Series Number	Element KW 3KW through 50KW See model chart for KW options.	Heater Stages Blank = One 2 = Two	Control System Blank = None T = Unit Thermostat SSR = SSR Control

*SSR proportional control maximum: 45 Amps

**SSRs require a 0-10vDC, 4-20mA, or 0-135Ω field supplied signal or an optional VT7225 thermostat

The 7300 Series LowBoy Plenum Heater is designed to fit jobs where the clear space between the ceiling and the floor above is as small as 11 ¾"

WARNING: This product can expose you to chemicals including nickel which is known to the State of California to cause cancer, and chromium, which is known to the State of California to cause birth defects and/or reproductive harm. For more information go to www.P65Warnings.ca.gov.

Product Specifications

- 20 gauge galvanized cabinet
- Variable speed motor, factory set at maximum
- Motor speed can be field adjusted to increase heat rise
- Acoustically insulated with 1" fiberglass
- Access panels on bottom of unit
- 24 Volt controls / Disconnect switch
- Air flow switch
- Terminal blocks
- 0" Clearance on sides, top, and bottom
- Single point connection
- Dust tight control enclosure
- Filter rack on inlet with throw away filter
- Inlet and outlet screens and duct connection
- Automatic primary limit control
- Optional wall thermostat, unit thermostat or SSR control which proportionally regulates heat output
- Made in U.S.A.

Standard Models

MFG CATALOG NUMBER	MFG MODEL NUMBER	KW	CFM RANGE	VOLTS/ PHASE	TOTAL AMPS for MOTOR & HEATER	STAGE	MOTOR VOLTAGE	FULL LOAD AMPS for MOTOR ONLY	MOTOR H.P.	WT. (LBS)
06180702	F1G7305	5	170-950	208/1	26	1	277	2	1/4	163
06175402	H1G7305			240/1	22					
06063002	G1G7305			277/1	20					
06176402	F3G7305			208/3	15					
05344502	H3G7305			240/3	14					
05346002	P3P7305			480/3	8		480	1		
06099602	F3G7310	10		208/3	32	1	277	2		
06177302	H3G7310			240/3	26					
06180602	P3P7310			480/3	14		480	1		
06063602	F3G7310-2			208/3	32	2	277	2		
05344602	H3G7310-2			240/3	26					
05346102	P3P7310-2			480/3	14		480	1		
05344802	H3G7312	12	270-1500	240/3	32	1	277	3	2 Motors @ 1/4 HP Each	219
05346202	P3P7312			480/3	17		480	2		
06085902	F3G7312-2			208/3	41	2	277	3		
05345002	H3G7312-2			240/3	32					
05346302	P3P7312-2			480/3	17		480	2		
05345202	H3G7315	15		240/3	39	1	277	3		
06177702	P3P7315			480/3	21		480	2		
06181002	F3G7315-2			208/3	49	2	277	3		
06085102	H3G7315-2			240/3	39					
05346402	P3P7315-2			480/3	21		480	2		
05346502	P3P7318	18		480/3	25	1	480	2		
05346602	P3P7318-2			480/3	25	2				

Note: Products listed in this section are custom built and subject to 100% cancellation/restock charges

Product Dimensions

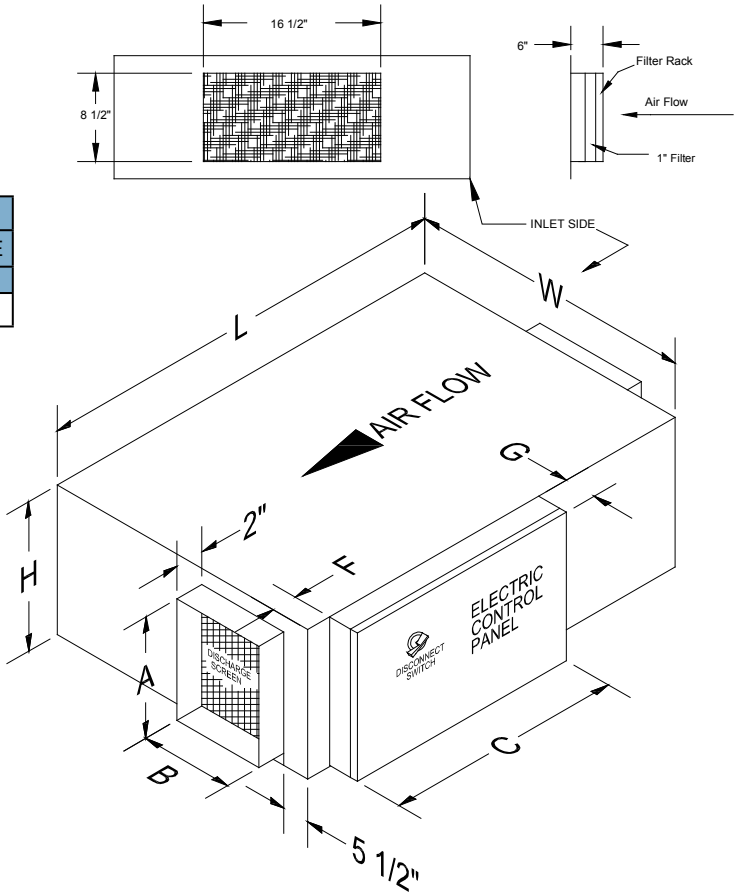

DIMENSIONS								
7300 SERIES	C	F	G	H	L	W	DISCHARGE	
							A	B
5 & 10 KW	28, 75”	1”	6”	11.75”	45”	26”	8”	10”

Note: Dimension C and G will vary with accessories

Control panel access standard as shown. For panel on opposite side access specify and order (Figure 5)

⚠WARNING: This product can expose you to chemicals including nickel which is known to the State of California to cause cancer, and chromium, which is known to the State of California to cause birth defects and/or reproductive harm. For more information go to www.P65Warnings.ca.gov.

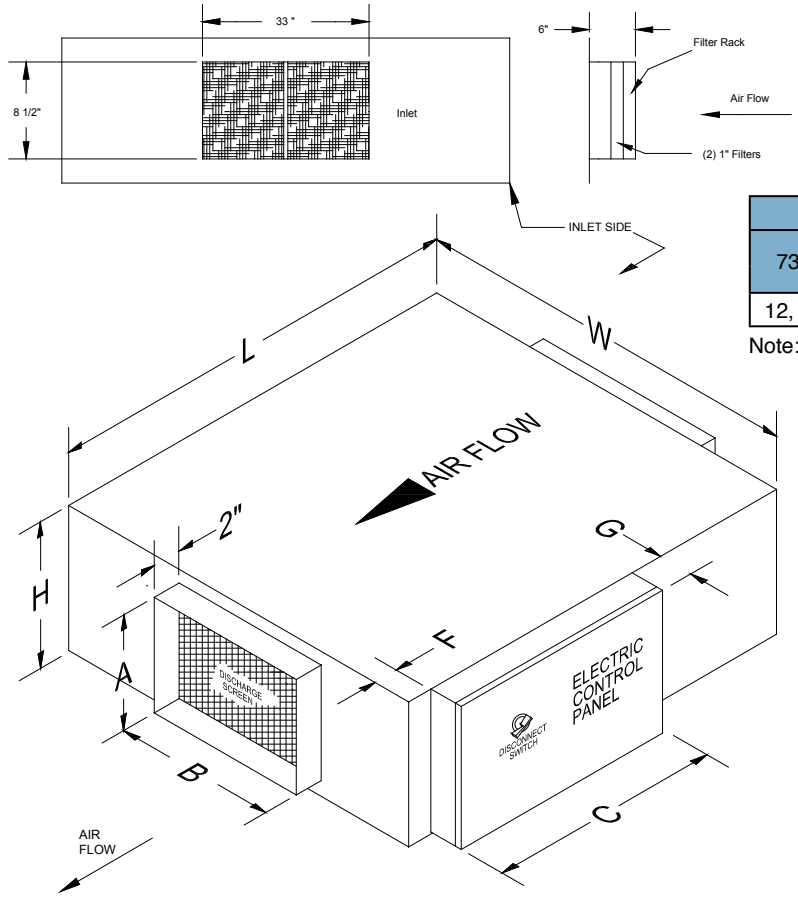

DIMENSIONS								
7300 SERIES	C	F	G	H	L	W	DISCHARGE	
							A	B
12, 15, & 18 KW	28, 75”	2”	6”	11.75”	45”	43”	8”	20”

Note: Dimension C and G will vary with accessories

Control panel access standard as shown. For panel on opposite side access specify and order (Figure 5)

⚠WARNING: This product can expose you to chemicals including nickel which is known to the State of California to cause cancer, and chromium, which is known to the State of California to cause birth defects and/or reproductive harm. For more information go to www.P65Warnings.ca.gov.

Intertek

⚠ **WARNING:** This product can expose you to chemicals including nickel which is known to the State of California to cause cancer, and chromium, which is known to the State of California to cause birth defects and/or reproductive harm. For more information go to www.P65Warnings.ca.gov.

Standard Features

- Galvanized Steel Element Rack - Always 1" shorter than duct height and ½" shorter than duct width to allow insertion clearance
- Galvanized Steel Compartment with ½" fiberglass Insulation & Hinged Cover
- Door Interlock Disconnect Switch
- Primary Automatic Reset Temp Limiting Control
- Load Carrying Secondary over Temperature Protective Device(s)
- Definite Purpose Magnetic Contactor(s)
- Differential Pressure Fan Inter-lock Switch
- Step Down Control Transformer / 24 Volt
- Permanently Attached Wiring Diagram on inside of Terminal Compartment Cover
- Made in U.S.A.

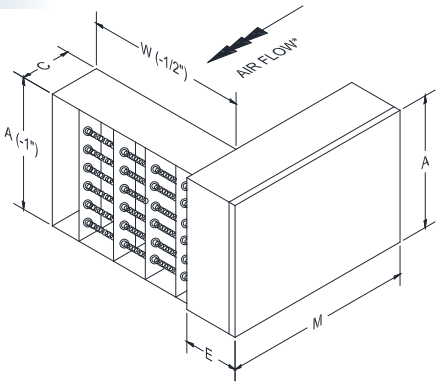

SPECIFY AIR FLOW
(HL)* HORIZONTAL LEFT
(HR) HORIZONTAL RIGHT

Standard Models

MFG CATALOG NUMBER	MFG MODEL NUMBER	KW	POWER VOLTS/ PHASE	DUCT WIDTH W	DUCT HEIGHT A	DIMENSIONS			AMPS	CONTROL STEPS	WT. (LBS)
						C	E	M			
06170002	PD5-128-1	5	240-1	12	8	4.75	6.5	26	20.9	1	22
06170102	PD10-1810-1	10		18	10	4.75	6.5	28	41.7	2	37
06170202	PD15-1812-1	15		18	12	4.75	6.5	27	62.5	2	33
06170302	PD20-2012-1	20		20	12	9.125	7.5	31	83.3	2	37
06170402	PD25-2016-1	25		20	16	9.125	7.5	38	104.2	3	56
06170502	7PD2-128-1	2	277-1	12	8	4.75	6.5	26	7.2	1	21
06170602	7PD3.5-128-1	3.5							12.6		
06170702	7PD5-128-1	5							18.1		
06170802	8PD5-128-3	5	208-3	12	8	4.75	6.5	26	13.9	1	22
06170902	8PD10-1810-3	10		18	10	4.75	6.5	22	27.8	1	27
06171002	8PD15-1812-3	15		18	12	9.125	6.5	25	41.7	1	32
06171102	8PD15-1812-2-3	15		18	12	9.125	6.5	28	41.7	2	34
06171202	8PD20-2012-3	20		20	12	9.125	6.5	40	55.6	2	39
06171302	8PD25-2016-3	25		20	16	9.125	6.5	29	69.5	2	58
06171402	8PD30-2416-2-3	30		24	16	9.125	7.5	29	83.4	2	65
06171502	8PD30-2416-3	30		24	16	9.125	7.5	35	83.4	3	60
06174302	8PD35-2416-3	35		24	16	9.125	7.5	35	97.3	3	65
06173202	8PD40-2416-3	40		24	16	9.125	7.5	43	111.2	3	75
06173302	8PD45-3016-3	45		30	16	9.125	7.5	43	125.1	3	80
06173402	8PD50-3016-3	50		30	16	9.125	7.5	43	139	3	85
06171602	PD5-128-3	5	240-3	12	8	4.75	6.5	26	12.1	1	21
06171702	PD10-1812-3	10		18	10	4.75	6.5	22	24.1	1	26
06171802	PD15-1812-1-3	15		18	12	4.75	6.5	20	36.2	1	30
06171902	PD15-1812-2-3	15		18	12	9.125	6.5	26	36.2	2	33
06172002	PD20-2012-3	19.9		20	12	9.125	6.5	28	47.9	2	39
06172102	PD25-2016-3	25		20	16	9.125	6.5	39	60.2	2	57
06172202	PD30-2416-2-3	30		24	16	4.75	6.5	25	72.3	2	57
06172302	PD30-2416-3-3	30		24	16	9.125	6.5	35	72.3	3	65
06173502	PD35-2416-3	35		24	16	9.125	7.5	35	84.3	3	65
06173602	PD40-2416-3	40		24	16	9.125	7.5	35	96.3	3	75
06173702	PD45-3016-3	45		30	16	9.125	7.5	43	108.4	3	80
06173802	PD50-3016-3	49.8		30	16	9.125	7.5	43	120	3	85
06172402	4PD5-128-3	5	480-3	12	8	4.75	6.5	26	6.1	1	21
06172502	4PD10-1810-3	10		18	10	4.75	6.5	22	12.1	1	26
06172602	4PD15-1812-3	15		18	12	4.75	6.5	20	18.1	1	30
06172702	4PD15-1812-2-3	15		18	12	9.125	6.5	26	18.1	2	34
06172802	4PD20-2012-3	20		20	12	9.125	6.5	26	24.1	2	39
06172902	4PD25-2016-3	25		20	16	9.125	6.5	22	30.1	2	58
06173002	4PD30-2416-2-3	30		24	16	4.75	6.5	18	36.2	2	65
06173102	4PD30-2416-3-3	30		24	16	9.125	6.5	24	36.2	3	65
06173902	4PD35-2416-3	35		24	16	9.125	6.5	26	42.2	3	65
06174002	4PD40-2416-3	39.9		24	16	9.125	6.5	40	48.1	3	75
06174202	4PD50-3016-3	50		30	16	9.125	6.5	36	60.2	3	85

CHMS Series Finned Tubular Element Duct Heater

Finned tubular duct heaters provide many benefits to the customer. They provide slower heating and cooling for closer temperature regulation, electrical shock hazards are reduced, not as susceptible to shorting on the elements, are easily serviced, and better withstand physical abuse.

- Insert or Flanged construction
- Integral or remote control panels
- Available with Nema 4-4x-12 control panels
- Made in U.S.A.

HOW TO DESIGNATE A MODEL:

CHMS	3	I	18W	12H	15KW	480	3	24	2	HL	1
Duct Heater Series	Control Box Options 3 = Control Box on Heater, R = Remote	Construction Options F = Flange Mount, I = Insert	Duct Width Dimension (over 55" heater must be flanged)	Duct Height Dimension	Kilowatts	Power Supply Volts	Phase 1 = Single Phase, 3 = Three Phase	Control Volts 24, 120, 240, & 277	Number of Control Stages	Air Flow Direction	Internal Duct Insulation 0 = None, 1 = 1" Thick, 2 = 2" Thick

Intertek

⚠ WARNING: This product can expose you to chemicals including nickel which is known to the State of California to cause cancer, and chromium, which is known to the State of California to cause birth defects and/or reproductive harm. For more information go to www.P65Warnings.ca.gov.

All blanks must be filled in when submitting an order to the factory

MINIMUM HEATER SIZE 8" X 8"
MAX KW 18.1 KW PER SQ. FT.

Product Specifications

General

- Provide Series "CHMS" enclosed element electric duct heaters as manufactured and listed on schedule
- Power, voltage phase, control voltage, wattage, duct size, number of steps to be per schedule
- Heaters to be either slip-in or flanged type as called for on schedule
- All heaters to be ETL listed for zero clearance to combustible surfaces and bear ETL label
- All heaters shall meet the requirements of the National Electric Code
- Standard terminal box, recessed terminal box, standard control cabinet, remote control cabinet and element housing to be made of 18 gauge aluminized steel

Element Construction

All elements to be made of high quality alloy resistor wire, centered and permanently encased within highly compacted, rock-hard refractory material, surrounded by stainless steel sheath. All element terminations shall be threaded stainless steel type to insure a positive connection to leads.

Terminal Box or Control Cabinet

Shall be constructed of 18 gauge Aluminized steel. All boxes to have a solid cover of the same gauge, complete with a piano type hinge on the longest dimension, tool operated latch and pull ring.

Safety Controls

- Primary over temperature protection shall be provided by built-in capillary type automatic reset thermal cutout. Capillary cutout shall be U.L. listed and of the fail safe type.
- Secondary over temperature protection shall consist of a sufficient number of capillary type manual resets controlling back-up contactors. Capillary shall be the "fail safe" and "trip free" type.
- All capillaries shall be installed in a protective Aluminum sheath. Sheath shall be etched and painted flat black to sense any over temperature condition the full length of heater face.
- Over-current protection incorporating fuses must be provided for all heaters rated more than 48 Amperes, and factory installed, within the heater enclosure or provided as a separate assembly by the heater manufacturer. Heaters exceeding 48 Amperes total line current must be divided into sub-circuits of less than 48 Amperes and be protected at not more than 60 Amperes.

Wiring Diagrams

- A separate, complete and specific wiring diagram shall be permanently attached to each heater. Typical wiring diagrams are not acceptable.
- Control and line terminals in each heater shall be marked to correspond to the wiring diagram.

Air Flow Designations Guide for CHMS Series Duct Heaters

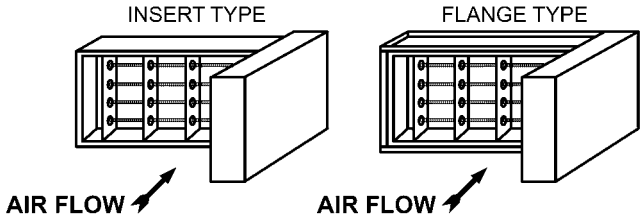

HR: Left to Right (shown)
HL: Right to Left
VU: Vertical Up

Control panel standard is extended upstream and same height as duct. This can be altered to accommodate available space.

HF Series Open Coil Element Duct Heater

Intertek

WARNING: This product can expose you to chemicals including nickel which is known to the State of California to cause cancer, and chromium, which is known to the State of California to cause birth defects and/or reproductive harm. For more information go to www.P65Warnings.ca.gov.

Open coil duct heaters offer several advantages when used properly. They release heat directly into the air stream resulting in lower element temperatures, provide higher wattage per square foot of duct area, have low pressure drop due to high percentage of open area, are light weight, easily installed, and economical with quick delivery available.

Standard Features

- Galvanized steel control box with optional ½" insulation and hinged cover
- Primary and secondary over temperature protection
- De-energizing definite purpose contactors
- Differential pressure fan interlock
- 24 Volt control transformer
- Fusing over 48 Amps (per NEC)
- Line terminal blocks
- Made in U.S.A.

•Insert or Flange •Integral or remote controls •Standard NEMA 1 control
•Panel - available with NEMA 4-4x -12 panels as option integral or remote mounted
• Comply with NEC specification

Custom Specified Models

How to designate an HF Series open coil duct heater:

480	3	HF	10KW	12W	12H	24	2	HR	B	G
Volts	Phase	Model	Kilowatts	Width	Height	Control Volts	Stage	Air Flow	Options	Options

Optional Controls & Features

A: Additional Stage
B: "A" Alloy Element Wire
C: Disconnecting Contactors
D: PE Switch
E: Minimum fusing under 48 Amps
F: Flanged Construction
G: Door Interlock Disconnect Switch
H_1: SCR Control Single Phase Only
H_3: SCR Control Three Phase Only
I: NEMA 1 Dust Tight Control Box
J: Electronic Step Controller

Air Flow Designations Guide for HF Series Duct Heaters

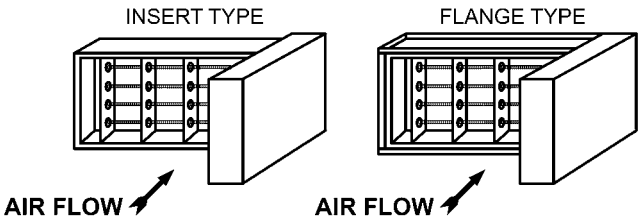

HR: Left to Right (shown)
HL: Right to Left
VU: Vertical Up
D: Vertical Down

Control panel standard is extended upstream and same height as duct. This can be altered to accommodate available space.

General

1. Provide open coil, electric duct heaters, as manufactured and as listed in the schedule.
2. Power voltage and phase, control voltage, wattage, duct size, number of steps to be as per schedule.
3. Heaters to be either Slip-in or Flanged type as called for.
4. Three phase heaters shall have balanced three phase steps unless specified otherwise.
5. All heaters to be ETL listed for zero clearance to combustible surfaces and bear the ETL label.
6. All heaters shall meet the requirements of the latest National Electric Code.
7. Standard terminal box, recessed terminal box, standard control cabinet, remote control cabinet as well as element housing and racks all to be made of heavy gauge galvanized steel. (Aluminized steel optional).
8. All heating coils to be made of high grade Nickel/Chromium resistance wire and terminated by means of crimped stud with stainless steel or nickel plated terminal hardware. All terminal hardware to be insulated from the heater by a two piece ceramic bushing.

LINE VOLTS	KILOWATTS	STAGE
120 208 240	0.5-2.5	1
	2.6-5.0	
	5.1-8.0	
	8.1-11.0	
	11.1-15.0	
	15.1-19.0	2
	19.1-24.0	
	24.1-28.0	
	28.1-30.0	
	30.1-34.0	3
	34.1-38.0	
	38.1-42.0	
	42.1-46.0	
	46.1-51.6	
	51.7-55.0	4
	55.1-60.0	
277	0.5-2.5	1
	2.6-5.0	
	5.1-8.0	
	8.1-11.0	2
	11.1-15.0	
480 600	0.5-2.5	1
	2.6-5.0	
	5.1-8.0	
	8.1-11.1	
	11.2-15.0	2
	15.1-19.0	
	19.1-24.0	
	24.1-28.0	3
	28.1-30.0	
	30.1-34.0	
	34.0-39.9	
	40.0-44.0	
	44.1-48.0	
	48.1-53.0	
	53.1-56.0	
	56.1-60.0	

Note: Duct Heaters are available up to 1000KW. KW and stages shown above are limited example of available models.

Element Assembly

1. To be of "Module" design with each module independently and easily removable from the terminal box or control cabinet.
2. Each module to contain no more than 2 layers of element coils so that any one coil may be replaced without disturbing others.
3. Element coils of each module to be on staggered spacing so that all coils per module will be in the air stream, and shadowing (overheating) and/or blank areas eliminated.

Element Housing

1. To be of No. 18 gauge galvanized (aluminized) steel and to be of roll-formed construction with multiple brakes and ribs for stiffness and rigidity.

Element Rack

1. To be constructed of No. 20 gauge galvanized (aluminized) steel and formed with multiple brakes and ribs for stiffness and rigidity.
2. Ceramic coil supports to be floating, but contained and easily replaceable.
3. Ceramic coil insulators to be on staggered spacing per rack to eliminate blank areas in the air pattern thru the heaters, and provide uniform heating over the entire cross section of the element.
4. Racks to support element coils on no more than 3 ½" centers.

Terminal Box or Control Cabinet

1. Shall be constructed of heavy gauge galvanized steel (aluminized optional) and in sizes up to 18" X 18" shall be No. 20 gauge and over to be No. 18 gauge. All boxes to have a solid cover, of the same gauge, complete with a piano type hinge on the longest side, approved tool operated latch and pull ring. Covers over 48" long to be provided with two latches and pull rings.
2. Insulation consisting of ½" high density fiberglass will be provided, attached to the cabinet, between the cabinet and the heating section.
3. Recessed terminal boxes used when ducts are internally insulated, or in air handling units, to be of the same general construction as item 1 above.

Airflow Direction

Heaters will be interchangeable for mounting in a horizontal or vertical duct except when position sensitive SCR's or capillary type limit controls are built-in. In these cases, airflow direction is as specified.

Safety Controls

1. Primary over temperature protection shall be provided by built in disc type automatic reset thermal cutouts for duct heaters up to 10' in width. Heaters over 40" high require two cutouts. Capillary type automatic reset thermal cutouts are required for any heater 10' wide or over. Capillary type controls to be UL listed.
2. Secondary over temperature protection shall consist of a sufficient number of load carrying replaceable disc controls to de-energize the elements if the primary system fails.
3. Fuse link type heat limiters shall not be acceptable. All manual safety devices shall be resetable thru the terminal box without removing the heater from the duct.

Wiring Diagrams

1. A separate, complete and specific wiring diagram shall be permanently attached to each heater. Typical wiring diagrams are not acceptable.
2. Control and line terminals in each heater shall be marked identical to the wiring diagram.

Heater Controls

1. All heater controls shall be factory mounted and wired.
2. Contactors shall be definite purpose type. No application type relays will be acceptable.
3. All controls shall be furnished as specified.

MINIMUM DUCT SIZE 8" X 6" MAX KW 20 KW PER SQ. FT.

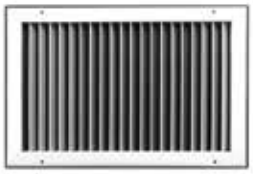

Discharge Grille

MFH - W Model

MFH - E Model

⚠ **WARNING:** This product can expose you to chemicals including nickel which is known to the State of California to cause cancer, and chromium, which is known to the State of California to cause birth defects and/or reproductive harm. For more information go to www.P65Warnings.ca.gov.

Product Applications

Perimeter Heating; Lobby Heating; Plenum Heating; Kitchen Make-up Air

The fan pac offers the advantages of eliminating large and unsightly roof-top package equipment, and through the roof duct systems which require costly installations with greater horsepower requirements**.**

Commercial or Industrial Unit Heaters

Since the fan pac incorporates a centrifugal blower designed to operate at static pressures of up to .70 inches w.g., it is ideally suited for hanging in unused overhead spaces and forcing the warm air to occupied floor areas. Ductwork can also be utilized to circulate the heated or ventilated air over large areas that may not be in the vicinity of the fan pac.

Product Construction, Options & Features

Construction:

- All units ETL Listed as a total package with electric heat or hot water coils
- Certified sound data by an independent testing laboratory
- Single point pneumatic pipe connections
- Each fan package is factory tested prior to shipment
- Fan package, electric heat and optional disconnect switch are factory wired as a package
- 20 gauge galvanized cabinet acoustically insulated 1” fiberglass
- 1” 4 lb. density core insulation is U.L. Listed and meets NFPA 90A standards
- Motors are single speed PSC with thermal over load protections, solid-state speed controller, and are permanently lubricated
- Access panels to the blower and motor are placed on both sides of the cabinet
- Fan and motor assembly is mounted on a special 16 Gauge pad and completely isolated from the casing with rubber vibration mounts
- Made in U.S.A.

Options:

- Factory wired disconnect switch
- Throw away filter
- Permanent filter
- Electric heat or hot water coils
- Sealed access panels
- 120 or 277 PSC motors
- Dust tight electric panel
- Acoustically lined discharge plenum or return air boot

Features:

- The fan pac is a basic and very simple on/off operation for an application that requires a fan coil unit with electric or hot water heat and a static pressure duct system of up to .70 inches w.g.
- The unit can be energized by electric controls (line voltage or low voltage) or by P.E. switches in conjunction with a pneumatic system.
- SCR motor speed controller for continuous adjustable fan speed from minimum to maximum RPM.
- Built-in line voltage thermostats are available for unit heater type applications.
- Built-in control circuit transformers are available in 24V or 120V.
- Hot water coils are one row ½” O.D., two row ⅝” O.D. copper tubes. Aluminum fins are standard with 10 FPI spacing.
- Transformers for fan motors are NOT available.

Product Specifications

The fan packages shall be factory assembled complete with electric heat/hot water coils. Factory mounted control panel shall provide all internal control and fan power wiring for a single point field connection. An optional factory mounted disconnect switch shall be furnished and prewired so as to disconnect all electrical components in the fan package. A single point field connection will be made at the disconnect switch. Fan package must be labeled and listed by a nationally recognized and locally accepted testing laboratory, such as ITS Intertek testing services. Fan packages must be tested for safety and in accordance with the latest National Electric Code. Casing shall be a minimum of 20 gauge galvanized steel and acoustically insulated with 1" fiberglass. The casing shall be Listed and meet NFPA 90A and 90 requirements. Blower casing shall be constructed of heavy gauge steel and baked enamel finish. Fan wheel shall be forward curved centrifugal type, dynamically balanced and be driven by direct drive, single speed permanent split capacitor motors. Motors shall be single phase, 1050 RPM. An electronic motor speed control shall be provided to allow continuously adjustable fan speed from minimum to maximum. Fan assembly shall be mounted on a 16 gauge steel sub-base, but shall be internally isolated with rubber-in-shear isolators to prevent vibration transfer to the sub-base. Motors shall also be isolated with rubber-in-shear isolators between the motor mounting legs and the blower casing. Fan motor assembly shall be accessible through access panels from both sides and rear of cabinet (bottom and top access panels are not acceptable). Access panels shall have gasket to prevent leakage and vibration transmission. An electric heater (hot water optional) shall be part of the total listed package and shall be controlled by pneumatic, electric controls enclosed in a NEMA-1 enclosure on the side of the cabinet. The panel shall be gasket sealed to prevent air leakage. Heater shall be the requested available voltage and phase. Each fan package will be factory tested prior to shipment and certified as such. Each fan shall have an optional throw-away or permanent filter, and an optional acoustically lined discharge plenum or return air boot.

Custom Specified Models

HOW TO DESIGNATE A MODEL:

	SERIES	HEAT TYPE	SIZE	HEAT CAPACITY	OPTIONS	
Electric Heat	MFH	E	500	5 KW	Disconnect Switch	Washable Filter
Hot Water Heat	MFH	W	500	12.6 MBH	Inlet Attenuator	Totally Enclosed Motor

Minimum CFMs Based On KW

KW	5	7	9	10
CFM	400	500	600	700

KW	11	13	14	15	17
CFM	800	900	1000	1100	1200

KW	18	20	21	23	24
CFM	1300	1400	1500	1600	1700

KW	26	27	28.5	30
CFM	1800	1900	2000	2100

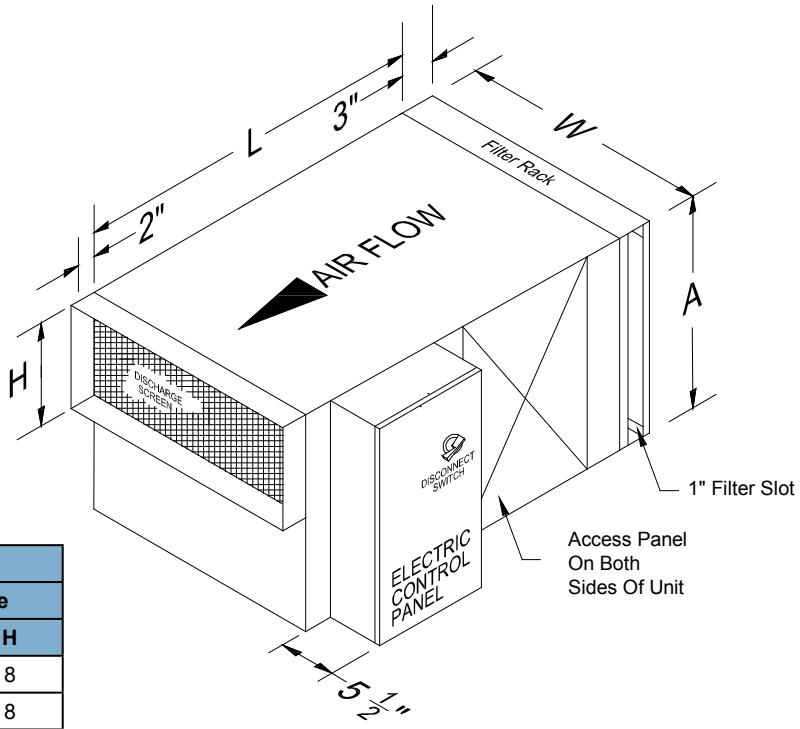

Model	Dimensions (Inches)				
	A	B	L	Discharge	
				W	H
300	12	14	28	14	8
500	14	18	36	18	8
750	18	18	36	18	10
1500	18	22	36	22	10
1800	18	26	36	26	10
2000	18	26	36	26	10
3000	18	44	36	44	10
4000	18	52	36	52	10

⚠ **WARNING:** This product can expose you to chemicals including nickel which is known to the State of California to cause cancer, and chromium, which is known to the State of California to cause birth defects and/or reproductive harm. For more information go to www.P65Warnings.ca.gov.

MFH PERFORMANCE DATA					MFH-E ELECTRIC HEAT						
					EXTERNAL STATIC PRESSURE (in. H_20)						
MODEL	MOTOR H.P.	MOTOR AMPS	FULL LOAD AMPS	MOTOR SPEED CONTR.	.1 CFM	.2 CFM	.3 CFM	.4 CFM	.5 CFM	.6 CFM	.7 CFM
		115V	277V								
300	1 @ 1/15	2.90	1.00	MAX	270	245	225	180	Below 50 CFM		
				MIN	95	85	80	70			
500	1 @ 1/6	3.60	1.10	MAX	740	700	640	590	530	490	450
				MIN	290	275	250	230	210	200	190
750	1 @ 1/4	5.30	1.70	MAX	1390	1370	1350	1270	1230	1130	1040
				MIN	450	440	430	420	410	405	400
1500	1 @1/2	8.30	2.50	MAX	1825	1790	1740	1660	1570	1450	1340
				MIN	820	790	760	675	590	515	440
1800	1 @ 1/2	9.70	3.10	MAX	2120	2080	2040	1940	1850	1750	1670
				MIN	850	840	820	810	790	740	630
2000	1 @ 3/4	11.00	4.30	MAX	2230	2160	2100	2040	1960	1860	1760
				MIN	1200	1120	1040	950	860	750	640
3000	2 @ 1/2	19.40	6.30	MAX	3160	3040	2920	2790	2600	2440	2240
				MIN	1840	1800	1760	1720	1640	1560	1460
4000	2 @ 3/4	22.00	8.60	MAX	4150	4050	3950	3830	3650	3250	3000
				MIN	2200	2180	2160	2130	2080	2000	1900

*See minimum CFM chart for all electric coil selections.
208V and 240V units use 277V rated motors - F.L.A. on 208V and 240V units same as 277V. For fan curve data consult factory

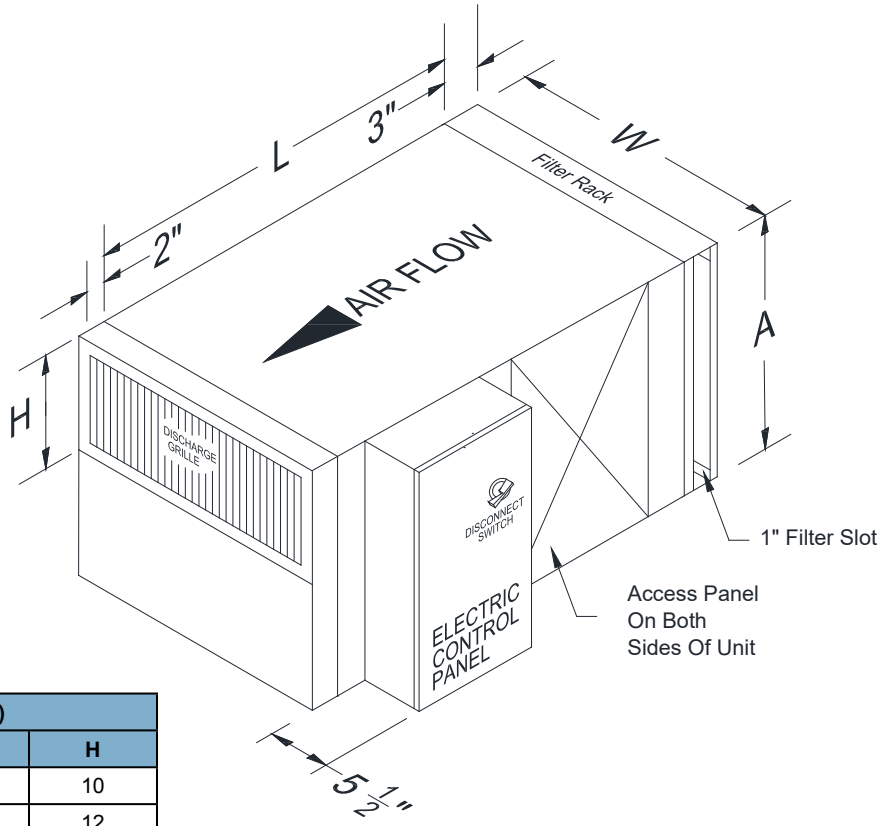

Basic Weight (no options)	
Model	lbs.
300	95
500	115
750	138
1500	160
1800	175
2000	198
3000	275
4000	315

Model	Dimensions (Inches)			
	A	B	L	H
500	14	18	36	10
750	18	18	36	12
1500	18	22	36	12
1800	18	26	36	12
2000	18	26	36	12
3000	18	44	36	12
4000	18	52	36	12

⚠ **WARNING:** This product can expose you to chemicals including nickel which is known to the State of California to cause cancer, and chromium, which is known to the State of California to cause birth defects and/or reproductive harm. For more information go to www.P65Warnings.ca.gov.

MFH PERFORMANCE DATA					MFH-DG ELECTRIC HEAT DISCHARGE GRILL						
					EXTERNAL STATIC PRESSURE (in. H_20)						
MODEL	MOTOR H.P.	MOTOR AMPS	FULL LOAD AMPS	MOTOR SPEED CONTR.	.1 CFM	.2 CFM	.3 CFM	.4 CFM	.5 CFM	.6 CFM	.7 CFM
		115V	277V								
300	1 @ 1/15	2.90	1.00	MAX	220	195	175	130	Below 50 CFM		
				MIN	95	85	80	70			
500	1 @ 1/6	3.60	1.10	MAX	640	600	540	490	430	390	350
				MIN	290	275	250	230	210	200	190
750	1 @ 1/4	5.30	1.70	MAX	1290	1270	1250	1170	1130	1030	940
				MIN	450	440	430	420	410	405	400
1500	1 @1/2	8.30	2.50	MAX	1725	1690	1640	1560	1470	1350	1240
				MIN	820	790	760	675	590	515	440
1800	1 @ 1/2	9.70	3.10	MAX	2020	1980	1940	1840	1750	1650	1570
				MIN	850	840	820	810	790	740	630
2000	1 @ 3/4	11.00	4.30	MAX	2130	2060	2000	1940	1860	1760	1660
				MIN	1200	1120	1040	950	860	750	640
3000	2 @ 1/2	19.40	6.30	MAX	3060	2940	2820	2960	2500	2340	2140
				MIN	1840	1800	1760	1720	1640	1560	1460
4000	2 @ 3/4	22.00	8.60	MAX	4050	3950	3850	3730	3550	3150	2900
				MIN	2200	2180	2160	2130	2080	2000	1900

*See minimum CFM chart for all electric coil selections.
208V and 240V units use 277V rated motors - F.L.A. on 208V and 240V units same as 277V. For fan curve data consult factory

MODEL	PAGE
150-TS	97
178 TMC	97
188 TASA	98
18D-2-30CF (Enclosed)	89
18D-2-30CF (Open)	89
18D-2-80CF (Enclosed)	89
198 TMC	97
222-30-TH-208V	78
222-30-TH-208V-AG	80
222-30-THA-208V	83
222-30-TH-240V	78
222-30-TH-240V-AG	80
222-30-THA-240V	82, 83
222-30-TH-277V	78
222-30-TH-277V-AG	80
222-30-THA-277V	82, 83
222-30-TH-480V	78
222-30-TH-480V-AG	80
222-30-THA-480V	82, 83
222-30-THSS-208V	78
222-30-THSS-208V-AG	80
222-30-THSS-240V	78
222-30-THSS-240V-AG	80
222-30-THSS-277V	78
222-30-THSS-277V-AG	80
222-30-THSS-480V	78
222-30-THSS-480V-AG	80
222-60-TH-208V	78
222-60-TH-208V-AG	80
222-60-THA-208V	82, 83
222-60-TH-240V	78
222-60-TH-240V-AG	80
222-60-THA-240V	82, 83
222-60-TH-277V	78
222-60-TH-277V-AG	80
222-60-THA-277V	82, 83
222-60-TH-480V	78
222-60-TH-480V-AG	80
222-60-THA-480V	82, 83
222-60-THSS-208V	78
222-60-THSS-208V-AG	80
222-60-THSS-240V	78
222-60-THSS-240V-AG	80
222-60-THSS-277V	78
222-60-THSS-277V-AG	80
222-60-THSS-480V	78
222-60-THSS-480V-AG	80
222-90-TH-208V	78
222-90-TH-208V-AG	80
222-90-THA-208V	82, 83
222-90-TH-240V	78
222-90-TH-240V-AG	80
222-90-THA-240V	82, 83

MODEL	PAGE
222-90-TH-277V	78
222-90-TH-277V-AG	80
222-90-THA-277V	82, 83
222-90-TH-480V	78
222-90-TH-480V-AG	80
222-90-THA-480V	82, 83
222-90-THSS-208V	78
222-90-THSS-208V-AG	80
222-90-THSS-240V	78
222-90-THSS-240V-AG	80
222-90-THSS-277V	78
222-90-THSS-277V-AG	80
222-90-THSS-480V	78
222-90-THSS-480V-AG	80
222-A30-TH-208V	78
222-A30-TH-208V-AG	80
222-A30-THA-208V	82, 83
222-A30-TH-240V	78
222-A30-TH-240V-AG	80
222-A30-THA-240V	82, 83
222-A30-TH-277V	78
222-A30-TH-277V-AG	80
222-A30-THA-277V	82, 83
222-A30-TH-480V	78
222-A30-TH-480V-AG	80
222-A30-THA-480V	82, 83
222-A30-THSS-208V	78
222-A30-THSS-208V-AG	80
222-A30-THSS-240V	78
222-A30-THSS-240V-AG	80
222-A30-THSS-277V	78
222-A30-THSS-277V-AG	80
222-A30-THSS-480V	78
222-A30-THSS-480V-AG	80
222-A60-TH-208V	78
222-A60-TH-208V-AG	80
222-A60-THA-208V	82, 83
222-A60-TH-240V	78
222-A60-TH-240V-AG	80
222-A60-THA-240V	82, 83
222-A60-TH-277V	78
222-A60-TH-277V-AG	80
222-A60-THA-277V	82, 83
222-A60-TH-480V	78
222-A60-TH-480V-AG	80
222-A60-THA-480V	82, 83
222-A60-THSS-208V	78
222-A60-THSS-208V-AG	80
222-A60-THSS-240V	78
222-A60-THSS-240V-AG	80
222-A60-THSS-277V	78
222-A60-THSS-277V-AG	80
222-A60-THSS-480V	78

MODEL	PAGE
222-A60-THSS-480V-AG	80
223-30-TH-208V	79
223-30-TH-208V-AG	81
223-30-THA-208V	82
223-30-TH-240V	79
223-30-TH-240V-AG	81
223-30-THA-240V	82
223-30-TH-277V	79
223-30-TH-277V-AG	81
223-30-THA-277V	82
223-30-TH-480V	79
223-30-TH-480V-AG	81
223-30-THA-480V	82
223-30-THSS-208V	79
223-30-THSS-208V-AG	81
223-30-THSS-240V	79
223-30-THSS-240V-AG	81
223-30-THSS-277V	79
223-30-THSS-277V-AG	81
223-30-THSS-480V	79
223-30-THSS-480V-AG	81
223-60-TH-208V	79
223-60-TH-208V-AG	81
223-60-THA-208V	82, 83
223-60-TH-240V	79
223-60-TH-240V-AG	81
223-60-THA-240V	82
223-60-TH-277V	79
223-60-TH-277V-AG	81
223-60-THA-277V	82
223-60-TH-480V	79
223-60-TH-480V-AG	81
223-60-THA-480V	82
223-60-THSS-208V	79
223-60-THSS-208V-AG	81
223-60-THSS-240V	79
223-60-THSS-240V-AG	81
223-60-THSS-277V	79
223-60-THSS-277V-AG	81
223-60-THSS-480V	79
223-60-THSS-480V-AG	81
223-90-TH-208V	79
223-90-TH-208V-AG	81
223-90-THA-208V	82
223-90-TH-240V	79
223-90-TH-240V-AG	81
223-90-THA-240V	82
223-90-TH-277V	79
223-90-TH-277V-AG	81
223-90-THA-277V	82
223-90-TH-480V	79
223-90-TH-480V-AG	81
223-90-THA-480V	82

MODEL	PAGE
223-90-THSS-208V	79
223-90-THSS-208V-AG	81
223-90-THSS-240V	79
223-90-THSS-240V-AG	81
223-90-THSS-277V	79
223-90-THSS-277V-AG	81
223-90-THSS-480V	79
223-90-THSS-480V-AG	81
24A01G-3	107
24A05A-1	107
24A05E-1	107
24A06G-1	107
303EX16RW	34, 49
303EX32RW	34, 49
303EX8RW	34, 49
305EX16	39
305EX32	39
305EX8	39
30R	34
30R2	34
30R7	34
30R8	34
31939009	79
31940009	79
31941009	79
32T1	49
32T2	49
3310EX33R	48
3310EX33WR	48
3320EX16	42, 43
3320EX33	42, 43
3380EX33	34
342-30-TH-208V	78
342-30-TH-208V-AG	80
342-30-THA-208V	82, 83
342-30-TH-240V	78
342-30-TH-240V-AG	80
342-30-THA-240V	82, 83
342-30-TH-480V	78
342-30-TH-480V-AG	80
342-30-THA-480V	82, 83
342-30-THSS-208V	78
342-30-THSS-208V-AG	80
342-30-THSS-240V	78
342-30-THSS-240V-AG	80
342-30-THSS-480V	78
342-30-THSS-480V-AG	80
342-60-TH-208V	78
342-60-TH-208V-AG	80
342-60-THA-208V	82, 83
342-60-TH-240V	78
342-60-TH-240V-AG	80
342-60-THA-240V	82, 83

MODEL	PAGE
342-60-TH-480V	78
342-60-TH-480V-AG	80
342-60-THA-480V	82, 83
342-60-THSS-208V	78
342-60-THSS-208V-AG	80
342-60-THSS-240V	78
342-60-THSS-240V-AG	80
342-60-THSS-480V	78
342-60-THSS-480V-AG	80
342-90-TH-208V	78
342-90-TH-208V-AG	80
342-90-THA-208V	82, 83
342-90-TH-240V	78
342-90-TH-240V-AG	80
342-90-THA-240V	82, 83
342-90-TH-480V	78
342-90-TH-480V-AG	80
342-90-THA-480V	82, 83
342-90-THSS-208V	78
342-90-THSS-208V-AG	80
342-90-THSS-240V	78
342-90-THSS-240V-AG	80
342-90-THSS-480V	78
342-90-THSS-480V-AG	80
342-A30-TH-208V	78
342-A30-TH-208V-AG	80
342-A30-THA-208V	82, 83
342-A30-TH-240V	78
342-A30-TH-240V-AG	80
342-A30-THA-240V	82, 83
342-A30-TH-480V	78
342-A30-TH-480V-AG	80
342-A30-THA-480V	82, 83
342-A30-THSS-208V	78
342-A30-THSS-208V-AG	80
342-A30-THSS-240V	78
342-A30-THSS-240V-AG	80
342-A30-THSS-480V	78
342-A30-THSS-480V-AG	80
342-A60-TH-208V	78
342-A60-TH-208V-AG	80
342-A60-THA-208V	82, 83
342-A60-TH-240V	78
342-A60-TH-240V-AG	80
342-A60-THA-240V	82, 83
342-A60-TH-480V	78
342-A60-TH-480V-AG	80
342-A60-THA-480V	82, 83
342-A60-THSS-208V	78
342-A60-THSS-208V-AG	80
342-A60-THSS-240V	78
342-A60-THSS-240V-AG	80
342-A60-THSS-480V	78

MODEL	PAGE
342-A60-THSS-480V-AG	80
3420EX16	46
3420EX34	46
3420EX8	46
343-30-TH-208V	79
343-30-TH-208V-AG	81
343-30-THA-208V	82
343-30-TH-240V	79
343-30-TH-240V-AG	81
343-30-THA-240V	82
343-30-TH-480V	79
343-30-TH-480V-AG	81
343-30-THA-480V	82
343-30-THSS-208V	79
343-30-THSS-208V-AG	81
343-30-THSS-240V	79
343-30-THSS-240V-AG	81
343-30-THSS-480V	79
343-30-THSS-480V-AG	81
343-60-TH-208V	79
343-60-TH-208V-AG	81
343-60-THA-208V	82
343-60-TH-240V	79
343-60-TH-240V-AG	81
343-60-THA-240V	82
343-60-TH-480V	79
343-60-TH-480V-AG	81
343-60-THA-480V	82
343-60-THSS-208V	79
343-60-THSS-208V-AG	81
343-60-THSS-240V	79
343-60-THSS-240V-AG	81
343-60-THSS-480V	79
343-60-THSS-480V-AG	80
343-90-TH-208V	79
343-90-TH-208V-AG	81
343-90-THA-208V	82
343-90-TH-240V	79
343-90-TH-240V-AG	81
343-90-THA-240V	82
343-90-TH-480V	79
343-90-TH-480V-AG	81
343-90-THA-480V	82
343-90-THSS-208V	79
343-90-THSS-208V-AG	81
343-90-THSS-240V	79
343-90-THSS-240V-AG	81
343-90-THSS-480V	79
343-90-THSS-480V-AG	81
3450EX16	46
3450EX34	46
3450EX8	46
3900-CS	66

MODEL	PAGE
3900-CSC	66
3900-ICS	66
3900-ICSC	66
3900-OCS	66
3900-OCSC	66
3900AC	66
3900ACC	66
3900DS	66
3900DSC	66
3900REC	66
3900RECC	66
3900T1	66
3900T1C	66
3900T2	66
3900T2C	66
3900WW120	66
3900WW28	66
3900WW36	66
3900WW48	66
3900WW60	66
3900WW72	66
3900WW96	66
39BS28	66
39BS28C	66
39BS36	66
39BS36C	66
39BS48	66
39BS48C	66
39BS60	66
39BS60C	66
39BS72	66
39BS72C	66
39BS96	66
39BS96C	66
39BS120	66
39BS120C	66
4300EX16	50
4300EX16W	50, 51
4300EX32	50
4300EX32W	50, 51
4300EX8	50
4300EX8W	50, 51
4300P	50
4300PB	39
4300PW	50, 51
43T	50, 51
43T2	50
4400EX16	39
4400EX32	39
4400EX8	39
462-30-TH-480V	78
462-30-TH-480V-AG	80
462-30-THA-480V	83

MODEL	PAGE
462-30-THSS-480V	78
462-30-THSS-480V-AG	80
462-60-TH-480V	78
462-60-TH-480V-AG	80
462-60-THA-480V	83
462-60-THSS-480V	78
462-60-THSS-480V-AG	80
462-90-TH-480V	78
462-90-TH-480V-AG	80
462-90-THA-480V	83
462-90-THSS-480V	78
462-90-THSS-480V-AG	80
462-A30-TH-480V	78
462-A30-TH-480V-AG	80
462-A30-THA-480V	83
462-A30-THSS-480V	78
462-A30-THSS-480V-AG	80
462-A60-TH-480V	78
462-A60-TH-480V-AG	80
462-A60-THA-480V	83
462-A60-THSS-480V	78
462-A60-THSS-480V-AG	80
463-30-TH-480V	79
463-30-TH-480V-AG	81
463-30-THA-480V	82
463-30-THSS-480V	79
463-30-THSS-480V-AG	81
463-60-TH-480V	79
463-60-TH-480V-AG	81
463-60-THA-480V	83
463-60-THSS-480V	79
463-60-THSS-480V-AG	81
463-90-TH-480V	79
463-90-TH-480V-AG	81
463-90-THA-480V	82
463-90-THSS-480V	79
463-90-THSS-480V-AG	81
483 TM	98
48T2	51
4PD10-1810-3	116
4PD15-1812-2-3	116
4PD15-1812-3	116
4PD20-2012-3	116
4PD25-2016-3	116
4PD30-2416-2-3	116
4PD30-2416-3-3	116
4PD35-2416-3	116
4PD40-2416-3	116
4PD5-128-3	116
4PD50-3016-3	116
59111101	81
59111102	81
59111103	81

MODEL	PAGE
59129101	81
59129102	81
59129103	81
59129104	81
59129105	81
59129106	81
59129107	81
59129108	81
59129109	81
61-01729-00	108
61-01729-20	108
61-01729-21	108
61-01729-22	108
61-01729-27	108
61-01730-00	108
61-01730-003	108
630-05129	88
630-16209	88
630-16249	88
630-16279	88
630-16489	88
630-25209	88
630-25249	88
630-25279	88
630-25489	88
630-36489	88
630-38579	88
631-16249	88
631-25489	88
631-25609	88
631-38579	88
632-1620	79, 88
632-1624	79, 88
632-2548	79, 88
6333D052033B30D0F	25
6333D052433B30D0F	25
6333D053834B30D0F1	25
6333D054134B30D0F1	25
6333D054833B30D0F	25
6333D103834B30D0F1	25
6333D104134B30D0F1	25
6346D102433B30D0F	25
6346D104833B30D0F	25
64337-022	88
64337-023	88
64337-024	88
64337-025	88
64337-026	88
64337-027	88
64337-028	88
64337-029	88
64337-030	88
64337-031	88

MODEL	PAGE
64337-032	88
64337-033	88
64337-034	88
64337-035	88
64337-036	88
64337-037	88
64337-038	88
64337-039	88
64337-040	88
64337-041	88
64337-049	88
64337-050	88
64337-051	88
64337-052	88
64337-053	88
64337-054	88
671-3454	88
671-3492	88
671-3784	88
671-3785	88
671-3786	88
671-5018	88
671-5056	88
671-5057	88
671-5058	88
671-5059	88
671-5060	88
671-5061	88
7PD2-128-1	116
7PD3.5-128-1	116
7PD5-128-1	116
8510	29
8512	29
8513	29
8514	29
8515	29
8516	29
8517	29
8518	29
8519	29
8520	29
8522	29
8523	29
8524	29
8525	29
8526	29
8527	29
8528	29
8529	29
8530	29
8532	29
8533	29
8534	29

MODEL	PAGE
8535	29
8536	29
8537	29
8538	29
8539	29
8PD10-1810-3	116
8PD15-1812-2-3	116
8PD15-1812-3	116
8PD20-2012-3	116
8PD25-2016-3	116
8PD30-2416-2-3	116
8PD30-2416-3	116
8PD35-2416-3	116
8PD40-2416-3	116
8PD45-3016-3	116
8PD5-128-3	116
8PD50-3016-3	116
91108	53
91120	53
9100EC	53
9100IC	53
9100OC	53
9100SP	53
9128	53
9136	53
9148	53
9160	53
9172	53
9184	53
9196	53
91BS012	53
91BS024	53
91BS036	53
91BS048	53
91BS060	53
91BS072	53
91BS084	53
91BS096	53
91BS108	53
91BS120	53
9300EC	53
9300IC	53
9300OC	53
9300SP	53
93108	53
93120	53
9328	53
9336	53
9348	53
9360	53
9372	53
9384	53
9396	53

MODEL	PAGE
93BS012	55
93BS024	55
93BS036	55
93BS048	55
93BS060	55
93BS072	55
93BS084	55
93BS096	55
93BS108	55
93BS120	55
A1600	21
A1601	21
A5105	15
A51100	18
A5120	15
A5150	15
A5175	18
A5520/UHB	10
AD5120	15
AD5150	15
AD5175	15
AET9DWTS	103
AET9SWTS	103
AGS1620	81
AGS1624	81
AGS1627	81
AGS1648	81
AGS2520	81
AGS2524	81
AGS2548	81
AGS3648	81
APS-3C	89
ASHDB ECL	58
ASHDB ECR	58
ASHDB IC	58
ASHDB OC	58
ASHDB SP	58
ASHDB WT	58
ASHDB-10	58
ASHDB-2	58
ASHDB-3	58
ASHDB-4	58
ASHDB-5	58
ASHDB-6	58
ASHDB-7	58
ASHDB-8	58
ASHDB-8/20-1000BS	58
ASHDB-8/20-100BS	58
ASHDB-8/20-200BS	58
ASHDB-8/20-300BS	58
ASHDB-8/20-400BS	58
ASHDB-8/20-500BS	58
ASHDB-8/20-600BS	58

MODEL	PAGE
ASHDB-8/20-700BS	58
ASHDB-8/20-800BS	58
ASHDB-8/20-900BS	58
ASHDB-9	58
ATR	53
B5105	15
B51100	18
B5150	15
B5175	18
BBS024A	69
BBS024AW	69
BBS024C	69
BBS028A	69
BBS028AW	69
BBS028C	69
BBS036A	69
BBS036AW	69
BBS036C	69
BBS040A	69
BBS040AW	69
BBS040C	69
BBS048A	69
BBS048AW	69
BBS048C	69
BBS060A	69
BBS060AW	69
BBS060C	69
BBS072A	69
BBS072AW	69
BBS072C	69
BBS084A	69
BBS084AW	69
BBS084C	69
BBS096A	69
BBS096AW	69
BBS096C	69
BBS120A	69
BBS120AW	69
BBS120C	69
BDR115	69
BDR115B	69
BDR115W	69
BOX 3310	34, 43, 48
BOX 3420	46
BOX 3450	46
BS9928-01	63
BS9928-02	63
BS9928-03	63
BS9936-01	63
BS9936-02	63
BS9936-03	63
BS9948-01	63
BS9948-02	63

MODEL	PAGE
BS9948-03	63
BS9960-01	63
BS9960-02	63
BS9960-03	63
BS9972-01	63
BS9972-02	63
BS9972-03	63
BS9984-01	63
BS9984-02	63
BS9984-03	63
BS9996-01	63
BS9996-02	63
BS9996-03	63
BS99108-01	63
BS99108-02	63
BS99108-03	63
BS99120-01	63
BS99120-02	63
BS99120-03	63
C1-TD	9
C1-TDP	9
CF35-C	98
CF36	99
CF47-C	98
CF48	99
CF59-C	98
CF60	99
CFHD36	99
CFHD48	99
CFHD60	99
CHWG-222	79
CHWG-223	79
CHWG-342	79
CHWG-343	79
CHWG-462	79
CHWG-463	79
CIT-1	89
CKTD110	104
CP122	37
CP122i	37
CP123	37
CP123i	37
CP125	37
CP125i	37
CP127	37
CP127i	37
CP2202i	37
CP2203i	37
CP2205i	37
CP2207i	37
CP702	37
CP703	37
CP705	37

MODEL	PAGE
CP707	37
CP802	37
CP803	37
CP805	37
CP807	37
CS	68
CS 12	52
CS 6	52
CS99-01-ATR 208V 22A	63
CS99-01-ATR 240V 22A	63
CS99-01-ATR 277V 18A	63
CS99-02-ATR 208V 22A	63
CS99-02-ATR 240V 22A	63
CS99-02-ATR 277V 18A	63
CS99-03-ATR 208V 22A	63
CS99-03-ATR 240V 22A	63
CS99-03-ATR 277V 18A	63
CS99-01-LVTR 208V 30A	63
CS99-01-LVTR 240V 30A	63
CS99-01-LVTR 277V 30A	63
CS99-01-LVTR 480V 15A	63
CS99-02-LVTR 240V 30A	63
CS99-02-LVTR 277V 30A	63
CS99-02-LVTR 480V 15A	63
CS99-02-LVTR 208V 30A	63
CS99-03-LVTR 208V 30A	63
CS99-03-LVTR 240V 30A	63
CS99-03-LVTR 277V 30A	63
CS99-03-LVTR 480V 15A	63
CS99-01-PC-208V 1PH	63
CS99-01-PC-240V 1PH	63
CS99-01-PC-480V 1PH	63
CS99-01-PC-277V 1PH	63
CS99-02-PC-277V 1PH	63
CS99-02-PC-208V 1PH	63
CS99-02-PC-240V 1PH	63
CS99-02-PC-480V 1PH	63
CS99-03-PC-208V 3PH	63
CS99-03-PC-240V 3PH	63
CS99-03-PC-208V 1PH	63
CS99-03-PC-240V 1PH	63
CS99-03-PC-277V 1PH	63
CS99-03-PC-480V 1PH	63
CS99-03-PC-480V 3PH	63
CSB	68
CTW155B	104
CTW155C	104
CSW	68
CV10012X	38
CV10022Xi	38
CV10027X	38
CV100X	38
CV100Xi	38

MODEL	PAGE
CV100YX	38
CV11012X	38
CV11022Xi	38
CV11027X	38
CV110X	38
CV110Xi	38
CV110YX	38
CV12512X	38
CV12522Xi	38
CV12527X	38
CV125X	38
CV125Xi	38
CV125YX	38
CV4512X	38
CV4522Xi	38
CV4527X	38
CV45X	38
CV45Xi	38
CV45YX	38
CV6012X	38
CV6022Xi	38
CV6027X	38
CV60X	38
CV60Xi	38
CV60YX	38
CV7512X	38
CV7522Xi	38
CV7527X	38
CV75X	38
CV75Xi	38
CV75YX	38
CV9012X	38
CV9022Xi	38
CV9027X	38
CV90X	38
CV90Xi	38
CV90YX	38
CVB42X	38
CVB60X	38
CVB84X	38
CVCBX	38
CVSP	38
D1600	21
D1602	21
D1603	21
D1610	21
D1612	21
D1613	21
D2022H10BA	103
D2022H10BB	103
D2025H10DA	103
DBF-10/DBT-10	57
DBF-2/DBT-2	57

MODEL	PAGE
DBF-3/DBT-3	57
DBF-4/DBT-4	57
DBF-5/DBT-5	57
DBF-6/DBT-6	57
DBF-7/DBT-7	57
DBF-8/DBT-8	57
DBF-9/DBT-9	57
DBF/DBT ECL	57
DBF/DBT ECR	57
DBF/DBT IC	57
DBF/DBT IECL	57
DBF/DBT IECR	57
DBF/DBT IF	57
DBF/DBT MF	57
DBF/DBT OC	57
DBF/DBT SP	57
DBF/DBT WT	57
DBF/DBT-1000BS	57
DBF/DBT-100BS	57
DBF/DBT-200BS	57
DBF/DBT-300BS	57
DBF/DBT-400BS	57
DBF/DBT-500BS	57
DBF/DBT-600BS	57
DBF/DBT-700BS	57
DBF/DBT-800BS	57
DBF/DBT-900BS	57
DC-33	25
DC-46	25
DC-66	25
DC-79	25
DC-SK-1	93
DCS-MT303	22, 23, 111
DCS1003	12
DCS1003/5100	17
DCS202/5100	17
DCS303	12
DCS403	12
DCS403/5100	17
DCS603/5100	17
DCS803	12
DR115	69
DR115B	69
DR115W	69
DS	69
DS5105	15
DS51100	18
DS5120	15
DS5150	15
DS5175	18
DSB	69
DSW	69
E2903-024C	68

MODEL	PAGE
E2903-024S	67
E2903-024SW	67
E2905-028C	68
E2905-028S	67
E2905-028SW	67
E2906-036C	68
E2906-036S	66
E2906-036SW	66
E2907-040C	67
E2907-040S	66
E2907-040SW	66
E2910-048C	67
E2910-048S	66
E2910-048SW	66
E2912-060C	67
E2912-060S	66
E2912-060SW	66
E2915-072C	67
E2915-072S	66
E2915-072SW	66
E3035DWBW	34
E3038DWBW	34
E3055T2DWB	39
E3055TDWB	39
E3058T2DWB	39
E3058TDWB	39
E3210RPW	49
E3210TRPW	49
E3215RPW	49
E3215TRPW	49
E3275RPW	49
E3275TRPW	49
E3312RP	47
E3312RPW	47
E3312T2RP	47
E3312T2RPW	47
E3312T2SRP	48
E3312T2SRPW	48
E3312TRP	47
E3312TRPW	47
E3312TSRP	48
E3312TSRPW	48
E3313RP	47
E3313RPW	47
E3313T2RP	47
E3313T2RPW	47
E3313T2SRP	48
E3313T2SRPW	48
E3313TRP	47
E3313TRPW	47
E3313TSRP	48
E3313TSRPW	48
E3321TD-RP	42

MODEL	PAGE
E3322TD-RP	42
E3323TD-RP	42
E3383D-RP	34
E3703-024	65
E3703-024B	65
E3705-028	65
E3705-028B	65
E3706-036	65
E3706-036B	65
E3707-040	65
E3707-040B	65
E3710-048	65
E3710-048B	65
E3712-060	65
E3712-060B	65
E3715-072	65
E3715-072B	65
E3904-28	64
E3904-28C	64
E3906-36	64
E3906-36C	64
E3910-48	64
E3910-48C	64
E3912-60	64
E3912-60C	64
E3915-60P	98
E3915-72	64
E3915-72C	64
E4310RP	50
E4310RPW	50
E4310TRP	50
E4310TRPW	50
E4315RP	50
E4315RPW	50
E4315TRP	50
E4315TRPW	50
E4375RP	50
E4375RPW	50
E4375TRP	50
E4375TRPW	50
E4410TRP	39
E4415TRP	39
E4475TRP	39
E4810RPW	51
E4810TRPW	51
E4815RPW	51
E4815TRPW	51
E4875RPW	51
E4875TRPW	51
E8801050	31
E8802075	31
E8803100	31
E8804125	31

MODEL	PAGE
E8805150	31
E8806200	31
EPETD8D	9, 103
EPETD8S	6, 9, 103
EPETP8D	9, 103
EPETP8S	9, 103
ET9D4TS	103
ET9DTS	103
ET9DWTS	103
ET9MTS	103
ET9S4TS	103
ET9SRTS	103
ET9STS	17, 103
ET9SWTS	103
ETD9MTS	103
ETD9STS	103
F1F2605CA1	21
F1F2607CA1	21
F1F2610CA1	21
F1F5103N	16, 17
F1F5105N	16, 17
F1F5503T	11
F1F5505T	11
F1F5507T	11
F1F5510T	11
F1F5515T	11
F1FUH03003	13
F1FUH05003	13
F1FUH07CA1	13
F1FUH10CA1	13
F1FUH12C03	13
F1FUH15CO3	13
F1FUH20CA1	13
F1FUH25CA1	13
F1G7203	113
F1G7205	113
F1G7305	114
F2903-024C	67
F2903-024S	66
F2903-024SW	66
F2905-028C	67
F2905-028S	66
F2905-028SW	66
F2906-036C	66
F2906-036S	66
F2906-036SW	66
F2907-040C	67
F2907-040S	66
F2907-040SW	66
F2910-048C	67
F2910-048S	66
F2910-048SW	66
F2912-060C	67

MODEL	PAGE
F2912-060S	66
F2912-060SW	66
F2915-072C	67
F2915-072S	66
F2915-072SW	66
F2917-084C	67
F2917-084S	66
F2917-084SW	66
F2920-096C	67
F2920-096S	66
F2920-096SW	66
F2925-120C	67
F2925-120S	66
F2925-120SW	66
F2F5103N	16, 17
F2F5105N	16, 17
F2F5107CA1L	16, 17
F2F5110CA1L	16, 17
F2FUH05C03	13
F2FUH10C03	13
F30522T2DWB	39
F30522TDWB	39
F3052T2DWB	39
F3052TDWB	39
F3220RPW	49
F3220T2RPW	49
F3316RP	47
F3316RPW	47
F3316T2RP	47
F3316T2RPW	47
F3316T2SRP	48
F3316T2SRPW	48
F3316TRP	47
F3316TRPW	47
F3316TSRP	48
F3316TSRPW	48
F3317RP	47
F3317RPW	47
F3317T2RP	47
F3317T2RPW	47
F3317T2SRP	48
F3317T2SRPW	48
F3317TRP	47
F3317TRPW	47
F3317TSRP	48
F3317TSRPW	48
F3326TD-RP	42
F3327TD-RP	42
F3346	40
F3346-BMS	40
F3346-BMS-W	41
F3346T	40
F3346T-BMS	40

MODEL	PAGE
F3346T-BMS-W	41
F3346T-W	41
F3346-W	41
F3386D-RP	34
F3387D-RP	34
F3422T	44
F3423T	44
F3424T	44
F3425T	44
F3452SD	46
F3452T	44
F3453SD	46
F3453T	44
F3454SD	46
F3454T	44
F3455SD	46
F3455T	44
F3472A1	36
F3473A1	36
F3474A1	36
F3475A1	36
F3482A1	35
F3483A1	35
F3484A1	35
F3485A1	35
F3703-024	65
F3703-024B	65
F3705-028	65
F3705-028B	65
F3706-036	65
F3706-036B	65
F3707-040	65
F3707-040B	65
F3710-048	65
F3710-048B	65
F3712-060	65
F3712-060B	65
F3715-072	65
F3715-072B	65
F3717-084	65
F3717-084B	65
F3720-096	65
F3720-096B	65
F3725-120	65
F3725-120B	65
F3904-28	64
F3904-28C	64
F3906-36	64
F3906-36C	64
F3910-48	64
F3910-48C	64
F3912-60	64
F3912-60C	64

MODEL	PAGE
F3915-72	64
F3915-72C	64
F3920-96	64
F3920-96C	64
F3G7210	113
F3G7210-2	113
F3G7215	113
F3G7215-2	113
F3G7220-2	113
F3G7223-2	113
F3F2605CA1	21
F3F2607CA1	21
F3F2610CA1	21
F3F2615CA1	21
F3F2625CA1	21
F3F2630CA1	21
F3F2640CA1	21
F3F2650CA1	21
F3F5115CA1L	16, 17
F3F5125CA1L	16, 17
F3F5130CA1L	16, 17
F3F5140CA1L	16, 17
F3F5150CA1L	16, 17
F3F5160CA1	19
F3F5170CA1	19
F3F5503T	11
F3F5505T	11
F3F5507T	11
F3F5510T	11
F3F5515T	11
F3F5520T	11
F3F5525T	11
F3F5530T	11
F3FUH03C03	13
F3FUH07C03	13
F3FUH12C03	13
F3FUH15C03	13
F3FUH20CA1	13
F3FUH25CA1	13
F3FUH30CA1	13
F3G7203	113
F3G7205	113
F3G7305	114
F4320RP	50
F4320RPW	50
F4320T2RP	50
F4320T2RPW	50
F4320TRP	50
F4320TRPW	50
F4420T2RP	39
F4420TRP	39
F4820RPW	51
F4820T2RPW	51

MODEL	PAGE
F4820TRPW	51
F8801050	31
F8802075	31
F8803100	31
F8804125	31
F8805150	31
F8806200	31
F9928-01-86	60
F9928-01-129	60
F9928-02-172	60
F9928-03-129	61
F9928-03-172	61
F9936-01-150	60
F9936-01-200	60
F9936-03-300	61
F9936-02-200	60
F9936-03-200	61
F9936-02-300	60
F9948-03-300	61
F9948-01-150	60
F9948-01-200	60
F9948-02-200	60
F9948-02-300	60
F9948-03-200	61
F9960-01-150	60
F9960-01-200	60
F9960-02-200	60
F9960-02-300	60
F9960-03-200	61
F9960-03-300	61
F9972-01-150	60
F9972-01-200	60
F9972-03-200	61
F9972-02-200	60
F9972-02-300	61
F9972-03-300	61
F9984-01-150	60
F9984-01-200	60
F9984-02-200	60
F9984-02-300	61
F9984-03-200	61
F9984-03-300	61
F9996-01-200	60
F9996-02-200	60
F9996-02-300	61
F9996-03-200	61
F9996-03-300	61
F9996-01-150	60
F99108-01-200	60
F99108-01-150	60
F99108-02-200	60
F99108-02-300	61
F99108-03-200	61

MODEL	PAGE
F99108-03-300	61
F99120-01-150	60
F99120-01-200	60
F99120-02-200	60
F99120-02-300	61
F99120-03-200	61
F99120-03-300	61
FAM33	25
FAM46	25
FAM66	25
FAM79	25
FEC-30-120	89
FEC-30-240	89
FEC-60-120	89
FEC-60-240	89
FEP-0812-1RA	8
FEP-0820-1RA	8
FEP-0820-3RA	9
FEP-0824-1RA	8
FEP-0824-3RA	9
FEP-0827-1RA	8
FEP-0848-1RA	8
FEP-0848-3RA	9
FEP-1612-1RA	8
FEP-1620-1RA	8
FEP-1620-3RA	9
FEP-1624-1RA	8
FEP-1624-3RA	9
FEP-1627-1RA	8
FEP-1648-1RA	8
FEP-1648-3RA	9
FEP-1657-1RA	8
FEP-1712-1RA	8
FEP-1720-1RA	8
FEP-1720-3RA	9
FEP-1724-1RA	8
FEP-1724-3RA	9
FEP-1727-1RA	8
FEP-1748-1RA	8
FEP-1748-3RA	9
FEP-1812-1RA	8
FEP-1820-1RA	8
FEP-1820-3RA	9
FEP-1824-1RA	8
FEP-1824-3RA	9
FEP-1827-1RA	8
FEP-1848-1RA	8
FEP-1848-3RA	9
FEP-3420-1RA	8
FEP-3420-3RA	9
FEP-3424-1RA	8
FEP-3424-3RA	9
FEP-3427-1RA	8

MODEL	PAGE
FEP-3448-1RA	8
FEP-3448-3RA	9
FEP-3457-1RA	8
FEP-3620-1RA	8
FEP-3620-3RA	9
FEP-3624-1RA	8
FEP-3624-3RA	9
FEP-3627-1RA	8
FEP-3648-1RA	8
FEP-3648-3RA	9
FEP-3657-1RA	8
FEP-3820-1RA	8
FEP-3820-3RA	9
FEP-3824-1RA	8
FEP-3824-3RA	9
FEP-38271-RA	8
FEP-3848-1RA	8
FEP-7620-1RA	8
FEP-7620-3RA	9
FEP-7624-1RA	8
FEP-7624-3RA	9
FEP-7627-1RA	8
FEP-7648-1RA	8
FEP-7648-3RA	9
FEP-7657-1RA	8
FEP3848-3RA	9
FES-0924-1C	96
FES-1024-1CA	96
FES-1520-3A	96
FES-1524-1A	96
FES-1524-3E	96
FES-1548-3E	96
FES-1560-3A	96
FES-3048-3A	96
FES-3060-3A	96
FES-4548-3	96
FES-6057-3	96
FFH-512A	87
FFH-912B	87
FH15	101
FH1T	101
FPC2110	90
FPC2120	90
FPC2140	90
FPC2160	90
FPC2210	90
FPC2220	90
FPC2240	90
FPC2260	90
FPC4110	90
FPC4120	90
FPC4140	90
FPC4160	90

MODEL	PAGE
FPC4210	90
FPC4220	90
FPC4240	90
FPC4260	90
FPC7110	90
FPC7120	90
FPC7140	90
FPC7160	90
FPC7210	90
FPC7220	90
FPC7240	90
FPC7260	90
FPC8110	90
FPC8120	90
FPC8140	90
FPC8160	90
FPC8210	90
FPC8220	90
FPC8240	90
FPC8260	90
FS5101	17, 19
FS5102	17, 19
FSA-1412-1	74
FSA-1420-1	74
FSA-1424-1	74
FSA-1427-1	74
FSA-1448-1	74
FSA-1457-1	74
FSA-3120-1	74
FSA-3124-1	74
FSA-3127-1	74
FSA-3418-1	74
FSA-3148-1	74
FSA-4320-3	74
FSA-4324-3	74
FSA-4327-1	74
FSA-4348-3	74
FSA-4357-3	74
FSA-9520-3	74
FSA-9524-3	74
FSA-9527-1	74
FSA-9548-3	74
FSA-9557-3	74
FSP-1412-1C	93
FSP-3120-1	93
FSP-3124-1	93
FSP-3127-1	93
FSP-3148-1	93
FSP-3157-1	93
FSP-4320-3	93
FSP-4324-3	93
FSP-4327-1	93
FSP-4348-3	93

MODEL	PAGE
FSP-4357-3	93
FSP-9520-3	93
FSP-9524-3	93
FSP-9527-1	93
FSP-9548-3	93
FSP-9557-3	93
FSS-1412-1	72
FSS-1420-1	72
FSS-1424-1	72
FSS-1427-1	72
FSS-1448-1	72
FSS-1457-1	72
FSS-3120-1	72
FSS-3124-1	72
FSS-3127-1	72
FSS-3148-1	72
FSS-3157-1	72
FSS-4320-3	72
FSS-4324-3	72
FSS-4327-1	72
FSS-4348-3	72
FSS-4357-3	72
FSS-9520-3	72
FSS-9524-3	72
FSS-9527-1	72
FSS-9548-3	72
FSS-9557-3	72
FSS95TMK	72
FSW5111	17
FSW5112	17, 19, 21
G1G2605CA1	21
G1G2607CA1	21
G1G2610CA1	21
G1G5103N	16, 17
G1G5105N	16, 17
G1G5107CA1L	16, 17
G1G5110CA1N	16, 17
G1G5503T	11
G1G5505T	11
G1G5507T	11
G1G5510T	11
G1G7203	112
G1G7205	112
G1G7305	113
G1GUH03003	13
G1GUH05003	13
G1GUH07CA1	13
G1GUH10CA1	13
G2903-024C	68
G2903-024S	67
G2903-024SW	67
G2905-028C	67
G2905-028S	67

MODEL	PAGE
G2905-028SW	67
G2906-036C	68
G2906-036S	67
G2906-036SW	67
G2907-040C	68
G2907-040S	67
G2907-040SW	67
G2907-048C	68
G2907-048S	67
G2907-048SW	67
G2909-060C	68
G2909-060S	67
G2909-060SW	67
G2910-048C	68
G2910-048S	67
G2910-048SW	67
G2911-072C	68
G2911-072S	67
G2911-072SW	67
G2912-060C	68
G2912-060S	67
G2912-060SW	67
G2913-084C	68
G2913-084S	67
G2913-084SW	67
G2915-072C	68
G2915-072S	67
G2915-072SW	67
G2915-096C	68
G2915-096S	67
G2915-096SW	67
G2917-084C	68
G2917-084S	67
G2917-084SW	67
G2918-120C	68
G2918-120S	67
G2918-120SW	67
G2920-096C	68
G2920-096S	67
G2920-096SW	67
G2925-120C	68
G2925-120S	67
G2925-120SW	67
G3032DWBW	34
G3052T2DWB	39
G3314RP	47
G3314RPW	47
G3314T2RP	47
G3314T2RPW	47
G3314TRP	47
G3314TRPW	47
G3315RP	47
G3315RPW	47

MODEL	PAGE
G3315T2RP	47
G3315T2RPW	47
G3315TRP	47
G3315TRPW	47
G3316RP	47
G3316RPW	47
G3316T2RP	47
G3316T2RPW	47
G3316TRP	47
G3316TRPW	47
G3317RP	47
G3317RPW	47
G3317T2RP	47
G3317T2RPW	47
G3317TRP	47
G3317TRPW	47
G3323TD-RP	42
G3324TD-RP	42
G3325TD-RP	42
G3326TD-RP	42
G3327TD-RP	42
G3346	40
G3346-BMS	40
G3346-BMS-W	41
G3346T	40
G3346T-BMS	40
G3346T-BMS-W	41
G3348	40
G3348-BMS	40
G3348T	40
G3348T-BMS	40
G3346T-W	41
G3346-W	41
G3348-BMS-W	41
G3348T-BMS-W	41
G3348T-W	41
G3348-W	41
G3383D-RP	34
G3384D-RP	34
G3385D-RP	34
G3386D-RP	34
G3387D-RP	34
G3422T	44
G3423T	44
G3424T	44
G3425T	44
G3452SD	46
G3452T	44
G3453SD	46
G3453T	44
G3454SD	46
G3454T	44
G3455SD	46

MODEL	PAGE
G3455T	44
G3472A1	36
G3473A1	36
G3474A1	36
G3475A1	36
G3482A1	35
G3483A1	35
G3484A1	35
G3485A1	35
G3703-024	65
G3703-024B	65
G3705-028	65
G3705-028B	65
G3706-036	65
G3706-036B	65
G3707-040	65
G3707-040B	65
G3707-048	65
G3707-048B	65
G3709-060	65
G3709-060B	65
G3710-048	65
G3710-048B	65
G3711-072	65
G3711-072B	65
G3712-060	65
G3712-060B	65
G3713-084	65
G3713-084B	65
G3715-072	65
G3715-072B	65
G3715-096	65
G3715-096B	65
G3717-084	65
G3717-084B	65
G3718-120	65
G3718-120B	65
G3720-096	65
G3720-096B	65
G3725-120	65
G3725-120B	65
G3904-28	64
G3904-28C	64
G3906-36	64
G3906-36C	64
G3910-48	64
G3910-48C	64
G3912-60	64
G3912-60C	64
G3915-72	64
G3915-72C	64
G3920-96	64
G3920-96C	64

MODEL	PAGE
G8801050	31
G8802075	31
G8803100	31
G8804125	31
G8805150	31
G8806200	31
G9928-01-86	60
G9928-01-129	60
G9928-02-172	61
G9928-03-172	62
G9936-01-150	60
G9936-01-200	60
G9936-02-200	61
G9936-02-300	61
G9936-03-200	62
G9936-03-300	62
G9948-01-150	60
G9948-01-200	60
G9948-02-200	61
G9948-02-300	61
G9948-03-200	62
G9948-03-300	62
G9960-01-150	60
G9960-01-200	60
G9960-02-200	61
G9960-02-300	61
G9972-01-150	61
G9972-01-200	60
G9972-02-200	61
G9972-02-300	61
G9972-03-200	62
G9984-01-150	60
G9984-01-200	60
G9984-02-200	61
G9984-03-200	62
G9984-02-300	61
G9996-01-150	60
G9996-01-200	60
G9996-02-200	61
G9996-02-300	61
G99108-02-300	61
G9960-03-200	62
G9996-03-200	62
G9960-03-300	62
G9972-03-300	62
G9984-03-300	62
G9996-03-300	62
G99108-01-150	60
G99108-01-200	60
G99108-02-200	61
G99108-03-200	62
G99108-03-300	62
G99120-01-150	60

MODEL	PAGE
G99120-01-200	60
G99120-02-200	61
G99120-02-300	61
G99120-03-200	62
G99120-03-300	62
GF-SK-1	93
H1G7203	113
H1G7205	113
H1G7305	114
H1H2605CA1	21
H1H2607CA1	21
H1H2610CA1	21
H1H5503T	11
H1H5505T	11
H1H5507T	11
H1H5510T	11
H1H5515T	11
H1HUH03003	13
H1HUH05003	13
H1HUH07CA1	13
H1HUH12C03	13
H1HUH15C03	13
H1HUH20CA1	13
H1HUH25CA1	13
H1HUH30CA1	13
H2903-024C	68
H2903-024CI	68
H2903-024HAW	55
H2903-024S	67
H2903-024SW	67
H2903-24AWi	67
H2905-028C	68
H2905-028CI	68
H2905-028S	67
H2905-028SW	67
H2905-28AWi	67
H2906-036C	68
H2906-036C	68
H2906-036S	67
H2906-036SW	67
H2906-36AWi	67
H2907-040C	68
H2907-040C	68
H2907-040S	67
H2907-040SW	67
H2907-40AWi	67
H2910-048C	68
H2910-048CI	68
H2910-048S	67
H2910-048SW	67
H2910-48AWi	67
H2912-060C	68
H2912-060C	68

MODEL	PAGE
H2912-060S	67
H2912-060SW	67
H2912-60AWi	67
H2915-072C	68
H2915-072CI	68
H2915-072S	67
H2915-072SW	67
H2915-72AWi	67
H2917-084C	68
H2917-084CI	68
H2917-084S	67
H2917-084SW	67
H2917-84AWi	67
H2920-096C	68
H2920-096CI	68
H2920-096S	67
H2920-096SW	67
H2920-120AWi	67
H2925-120C	68
H2925-120CI	68
H2925-120S	67
H2925-120SW	67
H2HUH05C03	13
H2HUH07C03	13
H3032DWBW	34
H30522T2DWB	39
H30522TDWB	39
H3052T2DWB	39
H3052TDWB	39
H3275RPW	49
H3275T2RPW	49
H3317RP	47
H3317RPW	47
H3317T2RP	47
H3317T2RPW	47
H3317T2SRP	48
H3317T2SRPW	48
H3317TRP	47
H3317TRPW	47
H3317TSRP	48
H3317TSRPW	48
H3327TD-RP	42
H3346	40
H3346-BMS	40
H3346T	40
H3346T-BMS	40
H3346-BMS-W	41
H3346T-BMS-W	41
H3346T-W	41
H3346-W	41
H3387D-RP	34
H3422T	44
H3423T	44

MODEL	PAGE
H3424T	44
H3425T	44
H3452SD	46
H3452T	44
H3453SD	46
H3453T	44
H3454SD	46
H3454T	44
H3455SD	46
H3455T	44
H3472A1	36
H3473A1	36
H3474A1	36
H3475A1	36
H3482A1	35
H3483A1	35
H3484A1	35
H3485A1	35
H3703-024	65
H3703-024B	65
H3705-028	65
H3705-028B	65
H3706-036	65
H3706-036B	65
H3707-040	65
H3707-040B	65
H3710-048	65
H3710-048B	65
H3712-060	65
H3712-060B	65
H3715-072	65
H3715-072B	65
H3717-084	65
H3717-084B	65
H3720-096	65
H3720-096B	65
H3725-120	65
H3725-120B	65
H3904-28	64
H3904-28C	64
H3906-36	64
H3906-36C	64
H3910-48	64
H3910-48C	64
H3912-60	64
H3912-60C	64
H3915-72	64
H3915-72C	64
H3920-96	64
H3920-96C	64
H3G7203	113
H3G7205	113
H3G7210	113

MODEL	PAGE
H3G7210-2	113
H3G7215	113
H3G7215-2	113
H3G7220-2	113
H3G7223-2	113
H3G7230-2	113
H3G7305	114
H3G7310	114
H3G7310-2	114
H3G7312	114
H3G7312-2	114
H3G7315	114
H3G7315-2	114
H3H2605CA1	21
H3H2607CA1	21
H3H2610CA1	21
H3H2615CA1	21
H3H2620CA1	21
H3H2625CA1	21
H3H2630CA1	21
H3H2640CA1	21
H3H2650CA1	21
H3H5503T	11
H3H5505T	11
H3H5507T	11
H3H5510T	11
H3H5515T	11
H3H5520T	11
H3H5525T	11
H3H5530T	11
H3H5605T	23
H3H5705T	22, 112
H3HUH03C03	13
H3HUH12C03	13
H3HUH15C03	13
H3HUH20CA1	13
H3HUH25CA1	13
H3HUH30CA1	13
H46C1166	107
H474 TMC	96
H5520/HMK	10
H5550/HMK	10
H8801050	31
H8801050i	31
H8802075	31
H8802075i	31
H8803100	31
H8803100i	31
H8804125	31
H8804125i	31
H8805150	31
H8805150i	31
H8806200	31

MODEL	PAGE
H8806200i	31
H9928-01-86	60
H9928-01-129	60
H9928-02-172	61
H9928-03-129	61
H9928-03-172	61
H9936-01-150	60
H9936-01-200	60
H9936-02-200	61
H9936-02-300	61
H9936-03-200	61
H9936-03-300	61
H9948-01-150	60
H9948-01-200	60
H9948-02-200	61
H9948-02-300	61
H9948-03-200	61
H9948-03-300	61
H9960-01-150	60
H9960-01-200	60
H9960-02-200	61
H9960-02-300	61
H9960-03-200	61
H9960-03-300	61
H9972-01-150	60
H9972-01-200	60
H9972-02-200	61
H9972-02-300	61
H9972-03-200	61
H9972-03-300	61
H9984-01-150	60
H9984-01-200	60
H9984-02-200	61
H9984-02-300	61
H9984-03-200	61
H9984-03-300	61
H9996-01-150	60
H9996-01-200	60
H9996-02-200	61
H9996-02-300	61
H9996-03-200	61
H9996-03-300	61
H99108-01-150	60
H99108-01-200	60
H99108-02-200	61
H99108-02-300	61
H99108-03-200	61
H99108-03-300	61
H99120-01-150	60
H99120-01-200	60
H99120-02-200	61
H99120-02-300	61
H99120-03-200	61

MODEL	PAGE
H99120-03-300	61
HF1B5103N	16, 17
HF1B5105N	16, 17
HF2B5103N	16, 17
HF2B5105N	16, 17
HF2B5107CA1L	16, 17
HF2B5110CA1L	16, 17
HF2HUH10C03	13
HF3210RPW	49
HF3210T2RPW	49
HF3215RPW	49
HF3215T2RPW	49
HF3220RPW	49
HF3220T2RPW	49
HF3222RPW	49
HF3222T2RPW	49
HF3315RP	47
HF3315RPW	47
HF3315T2RP	47
HF3315T2RPW	47
HF3315T2SRP	48
HF3315T2SRPW	48
HF3315TRP	47
HF3315TRPW	47
HF3315TSRP	48
HF3315TSRPW	48
HF3316RP	47
HF3316RPW	47
HF3316T2RP	47
HF3316T2RPW	47
HF3316T2SRP	48
HF3316T2SRPW	48
HF3316TRP	47
HF3316TRPW	47
HF3316TSRP	47
HF3316TSRPW	48
HF3323TD-RP	42
HF3324TD-RP	42
HF3325TD-RP	42
HF3326TD-RP	42
HF3384D-RP	34
HF3385D-RP	34
HF3386D-RP	34
HF3B51100CA1	19
HF3B5115CA1L	16, 17
HF3B5120CA1L	16, 17
HF3B5125CA1L	16,17
HF3B5130CA1L	16, 17
HF3B5140CA1L	16, 17
HF3B5150CA1L	16, 17
HF3B5160CA1	19
HF3B5170CA1	19
HF3B5180CA1	19

MODEL	PAGE
HF3B5190CA1	19
HF4310RP	50
HF4310RPW	50
HF4310T2RP	50
HF4310T2RPW	50
HF4310TRP	50
HF4310TRPW	50
HF4315RP	50
HF4315RPW	50
HF4315T2RP	50
HF4315T2RPW	50
HF4315TRP	50
HF4315TRPW	50
HF4320RP	50
HF4320RPW	50
HF4320T2RP	50
HF4320T2RPW	50
HF4320TRP	50
HF4320TRPW	50
HF4375RP	50
HF4375RPW	50
HF4375T2RP	50
HF4375T2RPW	50
HF4375TRP	50
HF4375TRPW	50
HF4410T2RP	39
HF4415T2RP	39
HF4420T2RP	39
HF4475T2RP	39
HF4810RPW	51
HF4810T2RPW	51
HF4815RPW	51
HF4815T2RPW	51
HF4820RPW	51
HF4820T2RPW	51
HF4875RPW	51
HF4875T2RPW	51
HF5605T	23
HF5705T	22, 112
HF5840TC	99
HF5848TC	99
HF684TC	100
HF685TC	100
HF686TC	100
HIHUH10CA1	13
HLA 12-208160-3.0-24	5
HLA 12-208160-5.0-24	5
HLA 12-208160-7.5-24	5
HLA 12-208360-3.0-24	5
HLA 12-208360-5.0-24	5
HLA 12-208360-7.5-24	5
HLA 12-240160-3.0-24	5
HLA 12-240160-5.0-24	5

MODEL	PAGE
HLA 12-240160-7.5-24	5
HLA 12-240360-3.0-24	5
HLA 12-240360-5.0-24	5
HLA 12-240360-7.5-24	5
HLA 12-480360-3.0-24	5
HLA 12-480360-5.0-24	5
HLA 12-480360-7.5-24	5
HLA 16-208360-10.0-24	5
HLA 16-240160-10.0-24	5
HLA 16-240360-10.0-24	5
HLA 16-480360-10.0-24	5
HLA 20-208360-15.0-24	5
HLA 20-240360-15.0-24	5
HLA 20-480360-15.0-24	5
HLA 20-480360-20.0-24	5
HLA 20-480360-25.0-24	5
HLA 20-600360-15.0-24	5
HLA 20-600360-20.0-24	5
HLA 20-600360-25.0-24	5
HLHM	6
HLPM1015	6
HLPM1525	6
HLPM37	6
HLT-1	6, 9, 103
HLT-2	9, 103
HLWM10	6
HLWM1525	6
HLWM37	6
HP-11-QT	91
HP-5-QT	91
HP-6-QT	91
HP6-1000120-2CT	110
HP6-1000120-2CTRP	111
HP6-1000120-2T	110
HP6-1000120-2TRP	111
HP8-1440120-2CT	110
HP8-1440120-2CTRP	111
HP8-1440120-2T	110
HP8-1440120-2TRP	111
HR-F1-7	109
HR-F3-8.5	109
HR-F3-12.2	109
HR-H1-8.1	109
HR-H1-8.5	109
HR-H3-14.1	109
HR-P3-10.0	109
HR-P3-15.0	109
HR-P3-20.0	109
HR-P3-20.0-2	109
HR-P3-24.0	109
ICH-240C	99
IDS	52
IDS 30	52

MODEL	PAGE
IDS 40	52
ITD	52
ITS	52
J3326TD-RP	43
J3327TD-RP	43
J3346	40
J3346-BMS	40
J3346-BMS-W	41
J3346T	40
J3346T-BMS	40
J3346T-BMS-W	41
J3346T-W	41
J3346-W	41
J3348	40
J3348-BMS	40
J3348-BMS-W	41
J3348T	40
J3348T-BMS	40
J3348T-BMS-W	41
J3348T-W	41
J3348-W	41
J3349	40
J3349-BMS	40
J3349-BMS-W	41
J3349T	40
J3349T-BMS	40
J3349T-BMS-W	41
J3349T-W	41
J3349-W	41
J3422T	44
J3423T	44
J3424T	44
J3425T	44
J3452SD	46
J3452T	44
J3453SD	46
J3453T	44
J3454SD	46
J3454T	44
J3455SD	46
J3455T	44
J3472A1	36
J3473A1	36
J3474A1	36
J3475A1	36
J3482A1	35
J3483A1	35
J3484A1	35
J3485A1	35
J9928-03-129	62
J9928-03-172	62
J9936-03-200	62
J9936-03-300	62

MODEL	PAGE
J9948-03-200	62
J9948-03-300	62
J9960-03-200	62
J9960-03-300	62
J9972-03-200	62
J9972-03-300	62
J9984-03-200	62
J9984-03-300	62
J9996-03-200	62
J9996-03-300	62
J99108-03-200	62
J99108-03-300	62
J99120-03-200	62
J99120-03-300	62
JK	68
JKB	68
JKW	68
J3325TD-RP	43
K3326TD-RP	43
K3327TD-RP	43
K3346	40
K3346-BMS	40
K3346-BMS-W	41
K3346T	40
K3346T-BMS	40
K3346T-BMS-W	41
K3346T-W	41
K3346-W	41
K3348	40
K3348-BMS	40
K3348-BMS-W	41
K3348T	40
K3348T-BMS	40
K3348T-BMS-W	41
K3348T-W	41
K3348-W	41
K3349	40
K3349-BMS	40
K3349-BMS-W	41
K3349T	40
K3349T-BMS	40
K3349T-BMS-W	41
K3349T-W	41
K3349-W	41
K3422T	44
K3423T	44
K3424T	44
K3425T	44
K3452SD	46
K3452T	44
K3453SD	46
K3453T	44
K3454SD	46

MODEL	PAGE
K3454T	44
K3455SD	46
K3455T	44
K3472A1	36
K3473A1	36
K3474A1	36
K3475A1	36
K3482A1	35
K3483A1	35
K3484A1	35
K3485A1	35
K9928-03-129	62
K9928-03-172	62
K9936-03-200	62
K9936-03-300	62
K9948-03-200	62
K9948-03-300	62
K9960-03-200	62
K9960-03-300	62
K9972-03-200	62
K9972-03-300	62
K9984-03-200	62
K9984-03-300	62
K9996-03-200	62
K9996-03-300	62
K99108-03-200	62
K99108-03-300	62
K99120-03-200	62
K99120-03-300	62
KB33	25
KB46	25
KB66	25
KB79	25
KT110	104
KT121	104
KTD110	104
KTO110	104
KTO121	104
L8801050	31
L8802075	31
L8803100	31
L8804125	31
L8805150	31
L8806200	31
LB110	107
LB210	107
LRD100A	107
LVRS	69
LVRSB	69
LVRSW	69
LVTR	52
M2903-024CI	68
M2903-24AWi	67

MODEL	PAGE
M2905-028CI	68
M2905-28AWi	67
M2906-036CI	68
M2906-36AWi	67
M2907-040CI	68
M2907-40AWi	67
M2910-048CI	68
M2910-48AWi	67
M2912-060CI	68
M2912-60AWi	67
M2915-072CI	68
M2915-72AWi	67
M2917-084CI	68
M2917-84AWi	67
M2920-096CI	68
M2925-120AWi	67
M2925-120CI	68
M3210T2RPWi	49
M3215T2RPWi	49
M3220T2RPWi	49
M3222T2RPWi	49
M3315T2SRPWi	48
M3316T2SRPWi	48
M3324TD-RPi	42
M3325TD-RPi	42
M3384D-RPi	34
M3385D-RPi	34
M3386D-RPi	34
M3472T2i	36
M3473T2i	36
M3474T2i	36
M3482T2i	35
M3483T2i	35
M3484T2i	35
M4310T2RPi	50
M4315T2RPi	50
M4320T2RPi	50
M4375T2RPi	50
M8801050i	31
M8802075i	31
M8803100i	31
M8804125i	31
M8805150i	31
M8806200i	31
MCS120-8CT	110
MFHE-0300-6-EAA	111
MFHE-0300-6-EAAC	111
MFHE-0300-6-EAACRP	111
MFHE-0300-6-EAARP	111
MFHE-0300-6-FAAF2D	111
MFHE-0300-6-HAA	111
MFHE-0300-6-HAAF2D	111
MFHE-0300-6-HAARP	111

MODEL	PAGE
MFHE-0300-8-EAA	111
MFHE-0300-8-EAAC	111
MFHE-0300-8-EAACRP	111
MFHE-0300-8-EAARP	111
MFHE-0300-8-HAA	111
MFHE-0300-8-HAARP	111
MM-13A	87
MM-24A	87
MM-33A	87
MM-46A	87
MMWG-13	87
MMWG-24	87
MMWG-33	87
MMWG-46	87
MS4122	33
MS4123	33
MS4124	33
MS4125	33
MS4126	33
MSE4120-12	33
N3472T2i	36
N3473T2i	36
N3474T2i	36
N3482T2i	35
N3483T2i	35
N3484T2i	35
OCH-46-120V-SSE	84
OCH-46-120VCE	84
OCH-46-120VE	84
OCH-46-208V-SSE	84
OCH-46-208VE	84
OCH-46-240V-SSE	84
OCH-46-240VE	84
OCH-46-277V-SSE	84
OCH-46-277VE	84
OCH-57-208V-SSE	84
OCH-57-208VCE	84
OCH-57-208VE	84
OCH-57-240V-SSE	84
OCH-57-240VCE	84
OCH-57-240VE	84
OCH-57-277V-SSE	84
OCH-57-277VE	84
OCH-57-480V-SSE	84
OCH-57-480VE	84
OCH2-55-208V	86
OCH2-55-208V-SS	86
OCH2-55-240V	86
OCH2-55-240V-SS	86
OCH2-55-277V	86
OCH2-55-277V-SS	86
OCH2-55-480V	86
OCH2-55-480V-SS	86

MODEL	PAGE
OCH2-66-208V	86
OCH2-66-208V-SS	86
OCH2-66-240V	86
OCH2-66-240V-SS	86
OCH2-66-277V	86
OCH2-66-277V-SS	86
OCH2-66-480V	86
OCH2-66-480V-SS	86
OCHWG-46	84
OCHWG-57	84
OFG 51100	18
OFG 5175	18
OFG5101	15
OFG5102	15
OFG5103	15
P3325TD-RP	43
P3326TD-RP	43
P3372TD-RP	43
P3346	40
P3346-BMS	40
P3346-BMS-W	41
P3346T	40
P3346T-BMS	40
P3346T-BMS-W	41
P3346T-W	41
P3346-W	41
P3348	40
P3348-BMS	40
P3348-BMS-W	41
P3348T	40
P3348T-BMS	40
P3348T-BMS-W	41
P3348T-W	41
P3348-W	41
P3349	40
P3349-BMS	40
P3349-BMS-W	41
P3349T	40
P3349T-BMS	40
P3349T-BMS-W	41
P3349T-W	41
P3349-W	41
P3472A1	36
P3473A1	36
P3474A1	36
P3475A1	36
P3482A1	35
P3483A1	35
P3484A1	35
P3485A1	35
P39936-03-200	62
P39948-03-200	62
P39960-03-200	62

MODEL	PAGE
P39972-03-200	62
P39984-03-200	62
P39996-03-200	62
P399108-03-200	62
P399120-03-200	62
P39928-03-172	62
P39936-03-300	62
P39948-03-300	62
P39960-03-300	62
P39972-03-300	62
P39984-03-300	62
P39996-03-300	62
P399108-03-300	62
P399120-03-300	62
P3G7210	114
P3P2605CA1	21
P3P2607CA1	21
P3P2610CA1	21
P3P2615CA1	21
P3P2620CA1	21
P3P2625CA1	21
P3P2630CA1	21
P3P2640CA1	21
P3P2650CA1	21
P3P5103CA1N	16, 17
P3P5105CA1N	16, 17
P3P5107CA1L	17
P3P5107CA1N	16
P3P51100CA1	19
P3P5110CA1N	16, 17
P3P5115CA1L	17
P3P5115CA1N	16
P3P5120CA1N	16, 17
P3P5125CA1N	16, 17
P3P5130CA1N	16, 17
P3P5140CA1N	16, 17
P3P5150CA1N	16, 17
P3P5160CA1	19
P3P5170CA1	19
P3P5180CA1	19
P3P5190CA1	19
P3P5503T	11
P3P5505T	11
P3P5507T	11
P3P5510T	11
P3P5515T	11
P3P5520T	11
P3P5525T	11
P3P5530T	11
P3P5540T	11
P3P5548T	11
P3P5605T	23
P3P5705T	22, 112

MODEL	PAGE
P3P7205	113
P3P7210-2	113
P3P7215	113
P3P7215-2	113
P3P7220-2	113
P3P7225-2	113
P3P7230-2	113
P3P7235-2	113
P3P7240-2	113
P3P7245-2	113
P3P7250-2	113
P3P7305	114
P3P7310	114
P3P7310-2	114
P3P7312	114
P3P7312-2	114
P3P7315	114
P3P7315-2	114
P3P7318	114
P3P7318-2	114
P3PUH03CA1	13
P3PUH05CA1	13
P3PUH07CA1	13
P3PUH10CA1	13
P3PUH12CA1	13
P3PUH15CA1	13
P3PUH20CA1	13
P3PUH25CA1	13
P3PUH30CA1	13
P3PUH40CA1	13
P3PUH48CA1	13
P5520/PMK	10
P5550/PMK	10
P8801050	31
P8802075	31
P8803100	31
P8804125	31
P8805150	31
P8806200	31
P9936-01-150	60
P9936-01-200	60
P9936-02-200	61
P9936-02-300	61
P9936-03-300	62
P9948-01-1 50	60
P9948-01-200	60
P9948-02-200	61
P9948-02-300	61
P9948-03-300	62
P9960-01-1 50	60
P9960-01-200	60
P9960-02-200	61
P9960-02-300	61

MODEL	PAGE
P9960-03-300	62
P9972-01-150	60
P9972-01-200	60
P9972-02-200	61
P9972-02-300	61
P9972-03-300	62
P9984-01-1 50	60
P9984-01-200	60
P9984-02-200	61
P9984-02-300	61
P9984-03-300	62
P9996-01-1 50	60
P9996-01-200	60
P9996-02-200	61
P9996-02-300	61
P9996-03-300	62
P99108-01-150	60
P99108-01-200	60
P99108-02-200	61
P99108-02-300	61
P99108-03-300	62
P99120-02-300	61
P99120-01-150	60
P99120-01-200	60
P99120-02-200	61
P99120-03-300	62
PCH-48C	94
PD-128-3	116
PD10-1810-1	116
PD10-1812-3	116
PD15-1812-1	116
PD15-1812-1-3	116
PD15-1812-2-3	116
PD20-2012-1	116
PD20-2012-3	116
PD25-2016-1	116
PD25-2016-3	116
PD30-2416-2-3	116
PD30-2416-3-3	116
PD35-2416-3	116
PD40-2416-3	116
PD45-3016-3	116
PD5-128-1	116
PD50-3016-3	116
PHLA12-208160-3.0-24-TDP	7
PHLA12-208160-5.0-24-TDP	7
PHLA12-208160-7.5-24-TDP	7
PHLA12-208360-3.0-24-TDP	7
PHLA12-208360-5.0-24-TDP	7
PHLA12-208360-7.5-24-TDP	7
PHLA12-240160-3.0-24-TDP	7
PHLA12-240160-5.0-24-TDP	7
PHLA12-240160-7.5-24-TDP	7

MODEL	PAGE
PHLA12-240360-3.0-24-TDP	7
PHLA12-240360-5.0-24-TDP	7
PHLA12-240360-7.5-24-TDP	7
PHLA12-480360-3.0-24-TDP	7
PHLA12-480360-5.0-24-TDP	7
PHLA12-480360-7.5-24-TDP	7
PHLA12-600360-3.0-24-TDP	7
PHLA12-600360-5.0-24-TDP	7
PHLA12-600360-7.5-24-TDP	7
PHLA16-208360-10.0-24-TDP	7
PHLA16-240160-10.0-24-TDP	7
PHLA16-240360-10.0-24-TDP	7
PHLA16-480360-10.0-24-TDP	7
PHLA16-600360-10.0-24-TDP	7
PHLA20-208360-15.0-24-TDP	7
PHLA20-240360-15.0-24-TDP	7
PHLA20-480360-15.0-24-TDP	7
PHLA20-480360-20.0-24-TDP	7
PHLA20-480360-25.0-24-TDP	7
PHLA20-600360-15.0-24-TDP	7
PHLA20-600360-20.0-24-TDP	7
PHLA20-600360-25.0-24-TDP	7
PR 120-277/120	52
PR 120-277/24	52
PR 120-277/240	52
PT3480	35
Q3H5103CA1	16
Q3H5105CA1	16
Q3H5107CA1	16
Q3H5110CA1	16
R3H5103CA1	16
R3H5105CA1	16
R3H5107CA1	16
R3H5110CA1	16
RCP122	37
RCP122i	37
RCP123	37
RCP123i	37
RCP125	37
RCP125i	37
RCP127	37
RCP127i	37
RCP2202i	37
RCP2203i	37
RCP2205i	37
RCP2207i	37
RCP702	37
RCP703	37
RCP705	37
RCP707	37
RCP802	37
RCP803	37
RCP805	37

MODEL	PAGE
RCP807	37
RD5120	15
RD5150	15
RD5175	15
RDBT-PD-10	57
RDBT-PD-1000BS	57
RDBT-PD-100BS	57
RDBT-PD-2	57
RDBT-PD-200BS	57
RDBT-PD-3	57
RDBT-PD-300BS	57
RDBT-PD-4	57
RDBT-PD-400BS	57
RDBT-PD-5	57
RDBT-PD-500BS	57
RDBT-PD-6	57
RDBT-PD-600BS	57
RDBT-PD-7	57
RDBT-PD-700BS	57
RDBT-PD-8	57
RDBT-PD-800BS	57
RDBT-PD-9	57
RDBT-PD-900BS	57
RDBT-PDIC	57
RDBT-PDIECL	57
RDBT-PDIECR	57
RDBT-PDOC	57
RH1505D0	108
RH3	108
RH35	108
RH3A	108
RHG-1012A	94
RK120EAA	105
RK124EAA	105
RK130EAA	105
RK134EAA	105
RKWP1AA	105
RMF-222-A	79
RMF-222-SS-A	79
RMF-223	79
RMF-223-SS	79
RMF-342-A	79
RMF-342-SS-A	79
RMF-343	79
RMF-343-SS	79
RMF-462-A	79
RMF-462-SS-A	79
RMF-463	79
RMF-463-SS	79
RPH-208-A	87
RPH-240-A	87
RPH1-5A	100
RPH2-5A	100

MODEL	PAGE
RPH22-5Ai	100
S2022H10AA	103
S2022H10AB	103
S2025H10AA	17, 103
SB-6	111
SB-8	111
SB6-120-CT	110
SB6-120-T	110
SB8-120-CT	110
SB8-120-T	110
SC5100	19
SDHW1001	106
SDHW1002	106
SF200	37
SF400	37
SO 12/4	93, 95
SO 14/3	96
SO 14/4	96
SO 4/3	96
SO 4/4	96
SO 6/4	96
SO 8/3	96
SO 8/4	96
SO 4/4	96
SO 2/4	96
SR120	69
SR120B	69
SR120W	69
SR220	69
SR220B	69
SR220W	69
T1	8
T2	8
T4398A1021	105
T5100	17
T5102	17
T5122	17
TAT-24-FAN-120V-1	109
TAT-30/1T	109
TAT-45/1T	109
TB3000	34
TB3380	34
TBD	69
TBS	69
TC1602	17, 21
TC5102	17, 19
TC5103	17
TF-33	25
TF-46	25
TF-66	25
TF-79	25
TFS5101	17, 19
TFS5102	17

MODEL	PAGE
TG1	108
TG1B	108
TG2	108
TG3	108
TG3B	108
TG4	108
TG5	108
TG6	108
TL8230A1003	105
TO-SK-1	93
TSH1TX	101
TSH20J	101
TSH20JW	101
TSH2TX	101
TUH1	12
TW123	17
TW145	104
TW146	104
TW1512	17
TW155A	11, 104
TW255A	11, 104
U8801050	31
U8802075	31
U8803100	31
U8804125	31
U8805150	31
U8806200	31
UHB-1	12
UHB-3	12
UHB-4	12
UT1001	105
UT3001	105
UT8001	105
UT9001	105
V5105	15
V51100	18
V5120	15
V5150	15
VHC-15	84, 89
VHC-32	84, 89
VMB-41-SS	79, 84
VT7225	19
W5520/WMK	10
W5550/WMK	10
WWA00	69
WWA01	69
WWA02	69
WWA03	69
WWA04	69
WWA05	69
WWA06	69
WWA07	69
WWA08	69

MODEL	PAGE
WWA09	69
Y3472A1	36
Y3473A1	36
Y3474A1	36
Y3475A1	36
Y3482A1	35
Y3483A1	35
Y3484A1	35
Y3485A1	35
YES-1520-3A	96
YES-1524-1A	96
YES-1524-3E	96
YES-1548-3E	96
YES-3048-3A	96
YES-3060-3A	96

MODEL	PAGE

MODEL	PAGE

© Copyright 2021 TPI Corporation
December 11, 2020; Distribution Products Catalog REV: 121120 PRINT DATE: 12/11/20